Time Relays (ZMN32) User Manual



ADDRESS: Ikitelli OSB Mah. Cevre 14. Blok Sok. Telas Blok Dis Kapi No: 1 Kat: 1-2 Basaksehir/Istanbul

Phone: +90 212 438 80 24
Fax: +90 212 438 80 25

info@gruparge.com

V.25.1

CONTENTS

PROPER USE AND SAFETY REQUIREMENTS 3
1. INTRODUCTION 4
1.1. General Features 4
1.2. Technical Features 4
1.3. LED Descriptions 5
1.4. LED Warnings 5
1.5. Use of the Device 6
1.6. Time Setting 6
1.7. Function Diagram 6
1.8. Technical Drawing 7
1.9. Product Assembly and Disassembly 7
1.10. Connection Diagram 8

PROPER USE AND SAFETY REQUIREMENTS



Cut all the power when connecting and disconnecting the device to a panel.



Do not clean the device with a solvent or similar material. Only use a dry cloth.



Please do not intervene to the device when a technical problem is encountered and get in contact with a technical service within the shortest time.



If the warnings are not taken into account, our company or the authorized dealer shall not be held responsible for the negative consequences.



Do not dispose in the trash, the device must be delivered to the collection centers (electronic device recycling centers). It should be recycled or disposed of without harming human health and environment.



The installation, assembly, activation and operation of the device should be done and used by only expert professionals and in accordance with safety regulations and instructions.

1. INTRODUCTION

1.1. General Features

Electronic time relays are microprocessor-based control devices used in time-critical processes. These devices are specially designed to activate or deactivate a circuit or a system within the set time and function. This relay group, which is generally used in the control panels of power circuits, can basically control the system by changing the relay positions with or without delay. In terms of operating function, there are basically two types of time relays: pull delayed and release delayed. Relays with a delay in pulling are known as straight time relays, while relays with a delay in releasing are known as reverse time relays.

This relay group, which has many different models, has varieties such as flasher model that can operate on and off, right-left relay known as inversion relay in the industry, which is used as an automatic position (direction) changer in automatic systems and repeats this process at intervals determined by the time setting on it, trigged time relay that can operate with trigger detection, star-delta time relay that controls the star-delta connection on a time basis.

1.2. Technical Features

Operating Voltage:	18-28 V AC/DC
	180 - 280 V AC
Operating Frequency:	50 / 60 Hz
Time Interval:	λ / Δ:20-600ms Y:0.1-60s
Relay Output:	2 × N/O, 5 A @ 250 VAC
Adjustment:	Potentiometer
Indicator:	4 LEDs
Ambient Temperature:	-5°C to +50°C
Protection Class:	IP20
Mounting:	DIN Rail

1.3. LED Descriptions

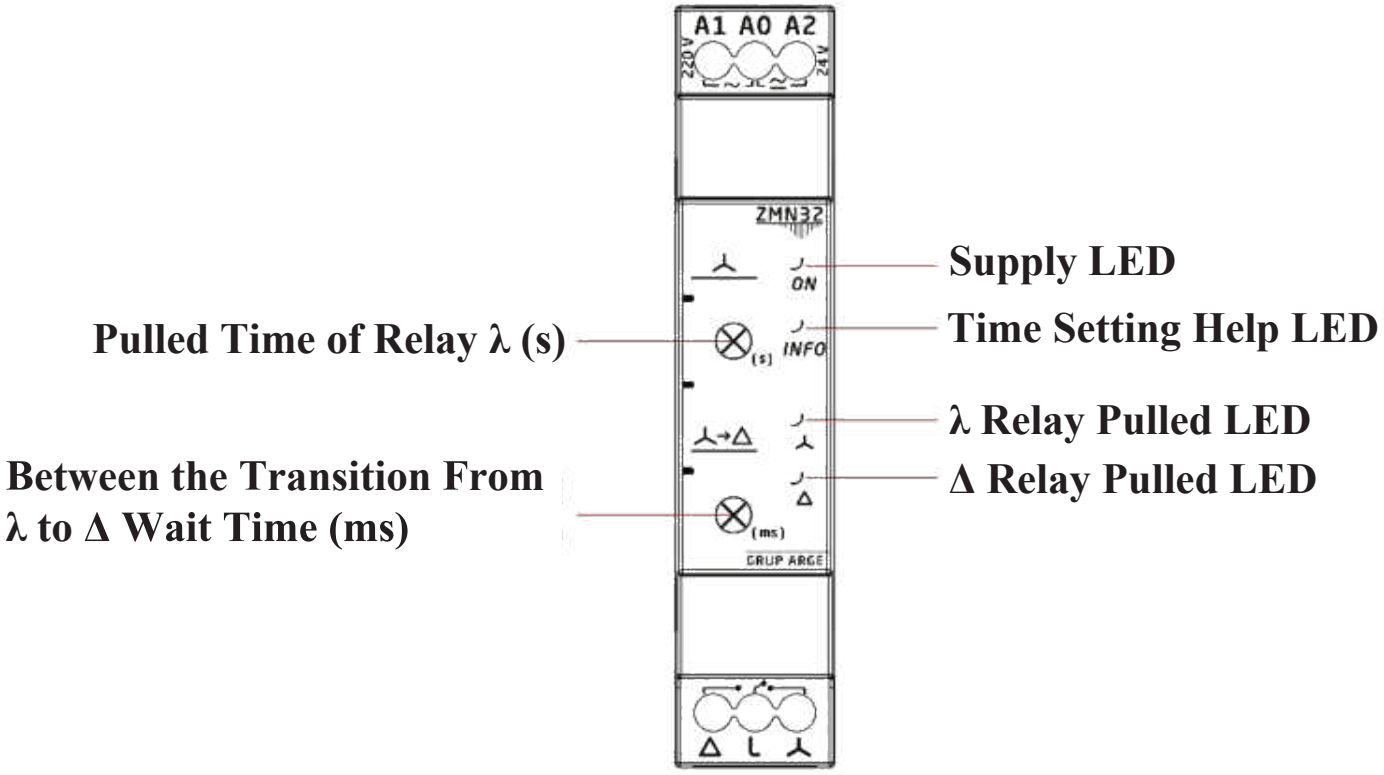

1.4. LED Warnings

●	**ON**	It shows that energy exists. It also flashes when the potentiometer changes.
◐	**INFO**	When adjusting the potentiometer, it lights up if the time value is set correctly, it turns off if it remains in the unstable zone.
●	**λ / Δ**	It lights up when the relay is pulled and turns off when it is not pulled.

Table:1

* ◐ Flasher

* ● Flashing

1.5. Use of the Device

ZMN32 Time Relay;

Upon energizing the device, the star relay pulls and the star LED lights up. It remains in this position for the set 0.1-60s Star Ton time. At the end of the time, the star relay releases and the star LED turns off. It starts counting the set time for the transition from star to delta in the set range of 20-600ms. During this time both relays are released. At the end of the time, the Delta relay pulls and the delta LED turns on. The delta relay remains pulled until the power is cut off. Times set with potentiometers can be affected by change until the relay controlled by the set time changes state. After changing the relay position, it is not affected by the time change.

ZMN32 models have info LED feature. The info LED helps to set the time. IF the potentiometer that sets the star to delta transition time is in the critical area when the power is first energized, the info LED will turn on and off until this potentiometer changes. When there is a change in the potentiometer, if the set potentiometer value is not in the critical area, the LED turns on, if it is in the critical area, the LED turns off.

1.6. Time Setting

There are 2 potentiometers on the product for time setting. One of them sets the time for the Star Relay to remain pulled while the other one sets the time for the star to delta transition. The duration of the Star Relay can be adjusted between 0.1-60 seconds with the related potentiometer. Star to delta transition time can be adjusted between 20-600ms with the related potentiometer.

1.7. Function Diagram

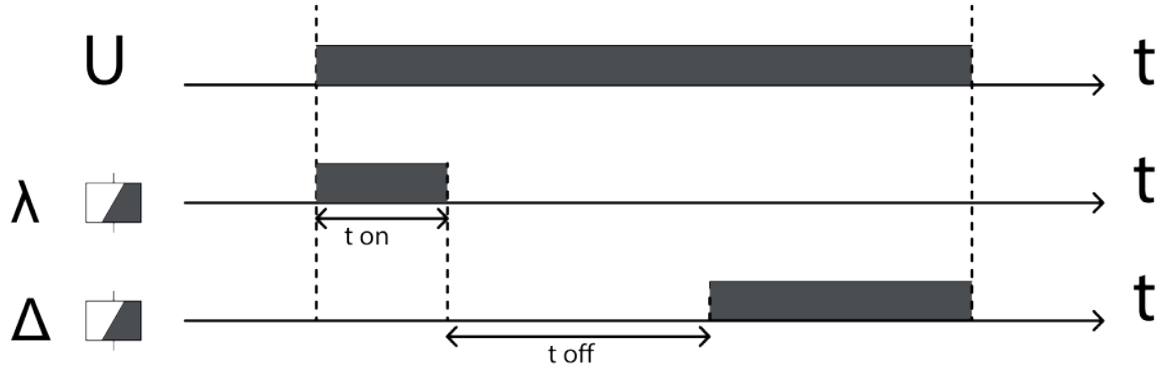

1.8. Technical Drawing

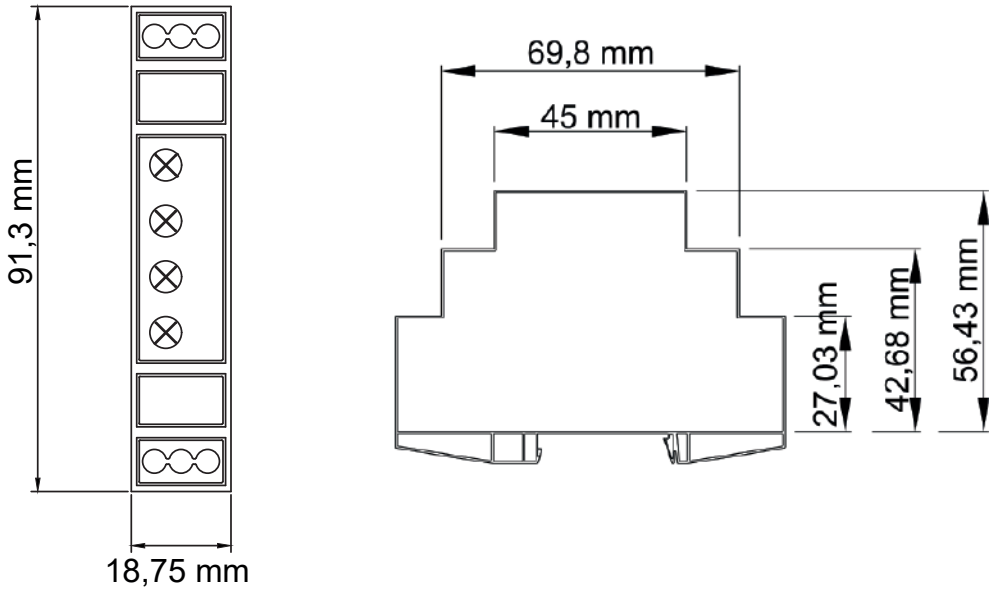

1.9. Product Assembly and Disassembly

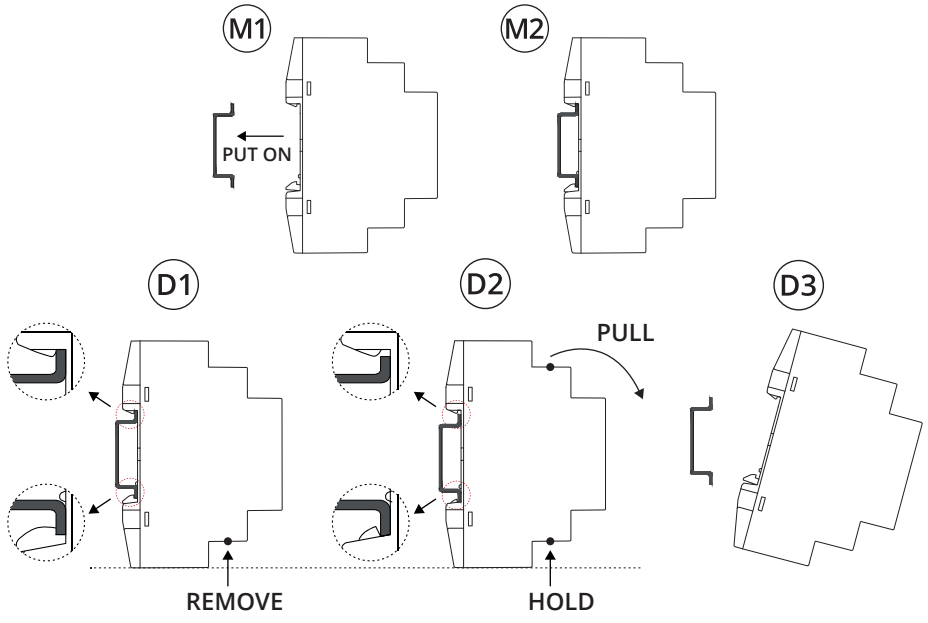

1.10. Connection Diagram

