Time Relays (ZMN01 & ZMN02) Datasheet





ADDRESS: Ikitelli OSB Mah. Cevre 14. Blok Sok. Telas Blok Dis Kapi No: 1 Kat: 1-2 Basaksehir/Istanbul

Phone: +90 212 438 80 24
Fax: +90 212 438 80 25

info@gruparge.com

V.25.1

1.1. General Features

Electronic time relays are microprocessor-based control devices used in time-critical processes. These devices are specially designed to activate or deactivate a circuit or a system within the set time and function. This relay group, which is generally used in the control panels of power circuits, can basically control the system by changing the relay positions with or without delay. In terms of operating function, there are basically two types of time relays: pull delayed and release delayed. Relays with a delay in pulling are known as straight time relays, while relays with a delay in releasing are known as reverse time relays.

This relay group, which has many different models, has varieties such as flasher model that can operate on and off, right-left relay known as inversion relay in the industry, which is used as an automatic position (direction) changer in automatic systems and repeats this process at intervals determined by the time setting on it, trigged time relay that can operate with trigger detection, star-delta time relay that controls the star-delta connection on a time basis.

1.2. Technical Features

Operating Voltage:	18-28 V AC/DC 180 - 280 V AC
Operating Frequency:	50 / 60 Hz
Time Interval:	0.1 sec-30 sec. (ZMN01) 0.1 sec-60 sec. (ZMN02)
Relay Output:	1 x C/O, 5 A @ 250 VAC
Adjustment:	Potentiometer
Indicator:	3 LEDs
Ambient Temperature:	-5°C to +50°C
Protection Class:	IP20
Mounting:	DIN Rail

1.3. Technical Drawing

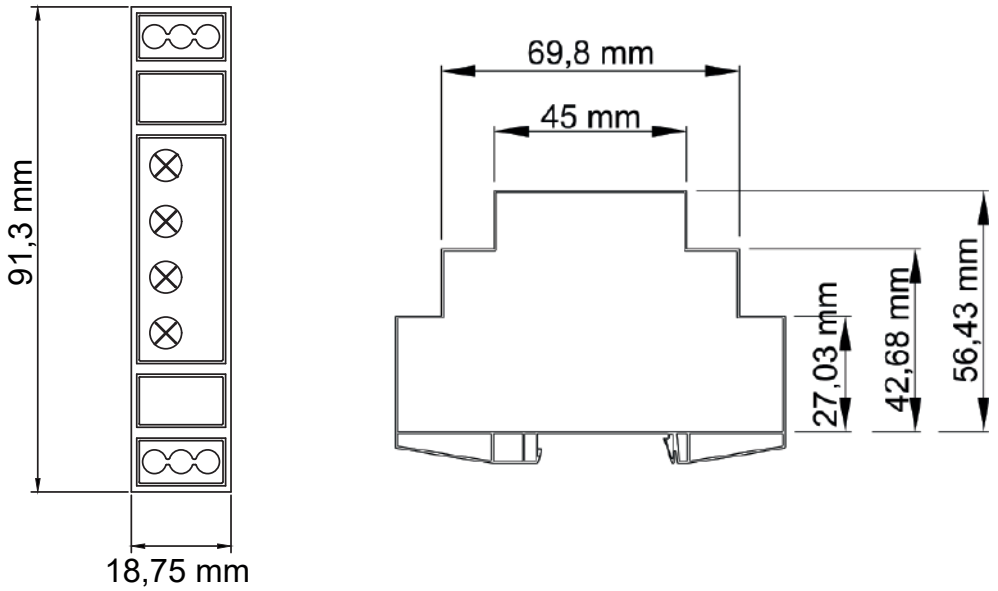

1.4. Product Assembly and Disassembly

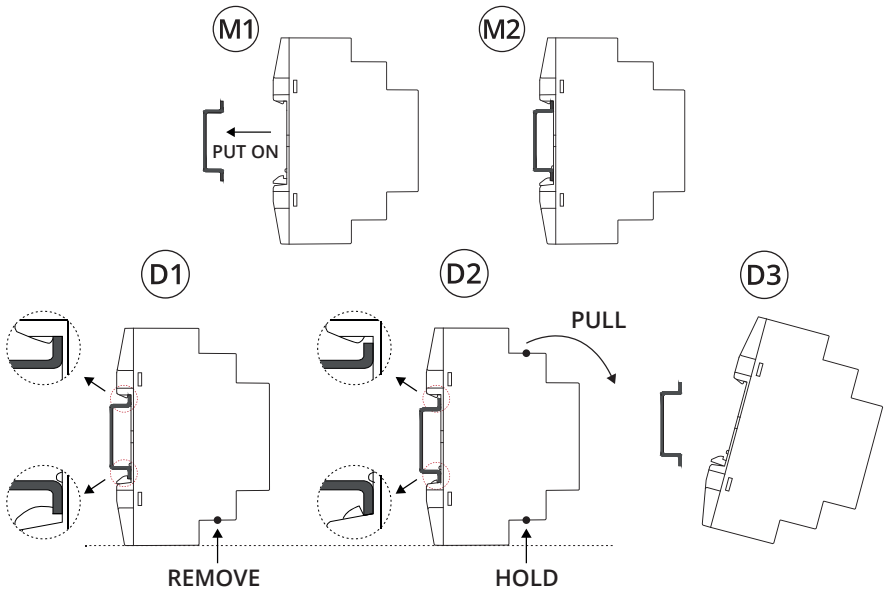

1.5. Connection Diagram

