COMMERCIAL TITLE

GRUP ARGE ENERJİ ve
KONTROL SİSTEMLERİ
SAN. TİC. LTD. ŞTİ.

PRODUCT CODE

GA52**

PRODUCT NAME

SRT*****

PRODUCT DESCRIPTION

THREE PHASE
SHUNT REACTORS

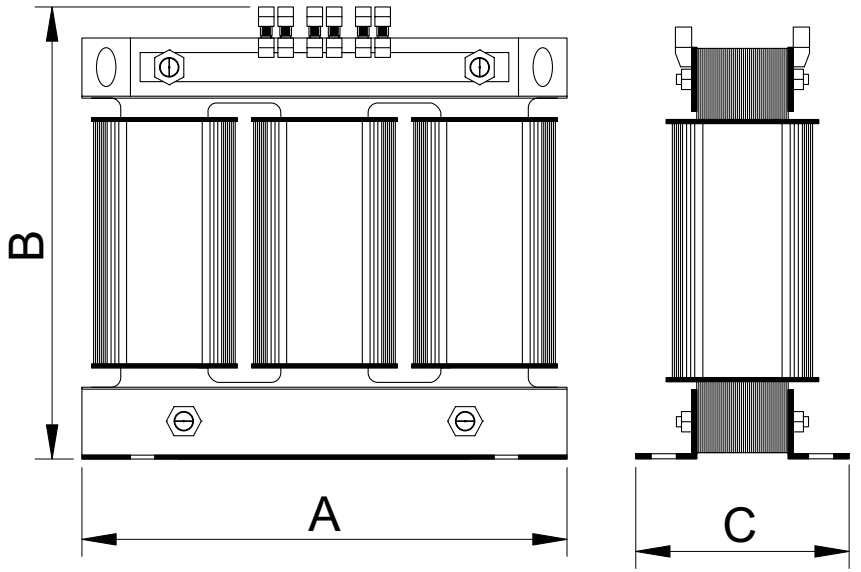

• Product sizes indicated in the table may vary. You can contact for detailed information.

Product Name	A (mm)	B (mm)	C (mm)	D (mm)	E (mm)
SRT 0.5	150	150	72	100	55
SRT 1.0	180	175	85	125	60
SRT 1.5	180	175	115	125	90
SRT 2.5	240	225	100	175	75
SRT 5.0	295	255	170	200	135
SRT 7.5	295	255	180	200	145
SRT 10.0	370	330	190	350	109
SRT 12.5	390	330	210	350	119
SRT 15.0	390	330	220	350	139
SRT 20.0	460	380	220	420	129
SRT 25.0	460	380	230	420	149
SRT 50.0	520	430	290	510	229