Shunt Reactor Datasheet



ADDRESS: Ikitelli OSB Mah. Cevre 14. Blok Sok. Telas Blok Dis Kapi No: 1 Kat: 1-2 Basaksehir/Istanbul

Phone: +90 212 438 80 24
Fax: +90 212 438 80 25

info@gruparge.com

V.25.1

1. INTRODUCTION

1.1. General Features

MV cables, UPS devices and electronic ballasted lighting elements used in enterprises have capacitive characteristics. In enterprises with such capacitive loads, it is necessary to use shunt reactors to meet the reactive power requirement and to keep the reactive ratios within the desired limits.

Nowadays, the load profile of the enterprises is gradually changing and the compensation operations performed in the past using only capacitors are no longer sufficient. With the continuous increase in the number of devices with capacitive characteristics, it has become mandatory to use shunt reactors in addition to capacitors in order to provide accurate compensation.

Depending on the size of the plant and the load profile, the capacity of the shunt reactors to be used varies. It is important to select the most suitable shunt reactor after analyzing the plant correctly, taking into account the cost.

1.2. Technical Features

- **Standard:** EN 60076-6 / EN 61558-2-20
- **Nominal Voltage:** 230 - 400 V AC
- **Nominal Power:** 0,5-50 kVAr
- **Nominal Frequency:** 50 Hz
- **Reactor Factor:** %100
- **Inductivity Tolerance:** %5
- **Isolation (Winding-Core):** 3 kV
- **Isolation Class:** Class F 155 ˚C
- **Humidity:** %95
- **Cooling:** Natural T40
- **Connection:** Terminal Block, Lug or Busbar
- **Core:** Low Loss, Siliceous Sheet, Air Gap
- **Winding Material:** Aluminum or Copper
- **Thermal Protection:** 120 ˚C (NC Contact)
- **Protection Class:** IP40

2. TECHNICAL SPECIFICATIONS

2.1. SVC Shunt Reactors (230 V)

Product Code	Product Name	Product Description	Power (kVAr)	A (Irms)	L (mH)	Dimensions W x H x D (mm)	Connection	Thermal Protection	Mounting Bolt	Weight (kg)
GA5001	SVC-R 1.0	1.0 kVAr SVC SHUNT REACTOR	1	4,34	168,38	120 x 105 x103	Terminal Block	✔	M8	5
GA5002	SVC-R 1.5	1.5 kVAr SVC SHUNT REACTOR	1,5	6,52	112,25	150 x125 x 121	Terminal Block	✔	M8	9
GA5003	SVC-R 3.0	3.0 kVAr SVC SHUNT REACTOR	3	13,04	56,12	192 x 164 x 131	Terminal Block	✔	M8	15

It is recommended to use SVC shunt reactors only with SVC Load Drivers.
Product dimensions specified in the table may vary. Please contact us for detailed information.

2.2. Monophase Shunt Reactors (230 V)

Product Code	Product Name	Product Description	Power (kVAr)	A (Irms)	L (mH)	Dimensions W x H x D (mm)	Connection	Thermal Protection	Mounting Bolt	Weight (kg)
GA5101	SRM 1.0	1.0 kVAr MONOPHASE SHUNT REACTOR	1	4,34	168,38	120 x 105 x 111,5	Terminal Block	✔	M8	6
GA5102	SRM 1.5	1.5 kVAr MONOPHASE SHUNT REACTOR	1,5	6,52	112,25	150 x 125 x 121	Terminal Block	✔	M8	9
GA5103	SRM 3.0	3.0 kVAr MONOPHASE SHUNT REACTOR	3	13,04	56,12	192 x 164 x 136	Terminal Block	✔	M8	16
GA5104	SRM 5.0	5.0 kVAr MONOPHASE SHUNT REACTOR	5	21,7	33,7	210 x 315 x 145	Cable Lug (M8)	✔	M8	20
GA5105	SRM 7.5	7.5 kVAr MONOPHASE SHUNT REACTOR	7,5	32,6	22,45	210 x 260 x 165	Cable Lug (M10)	✔	M8	26
GA5106	SRM 10.0	10.0 kVAr MONOPHASE SHUNT REACTOR	10	43,4	16,83	255 x 315 x 155	Busbar (M8)	✔	M8	32
GA5107	SRM 15.0	15.0 kVAr MONOPHASE SHUNT REACTOR	15	65,2	11,2	290 x 365 x 185	Busbar (M10)	✔	M8	50
GA5108	SRM 20.0	20.0 kVAr MONOPHASE SHUNT REACTOR	20	86,9	8,4	290 x 365 x 205	Busbar (M10)	✔	M8	62

Monophase Shunt Reactors can be used with SVC Load Drivers, Thyristor Switched Reactor and Capacitor Contactors.
Product dimensions specified in the table may vary. Please contact us for detailed information.

2.3. Three-Phase Shunt Reactors (400 V)

Product Code	Product Name	Product Description	Power (kVAr)	A (Irms)	L (mH)	Dimensions W x H x D (mm)	Connection	Thermal Protection	Mounting Bolt	Weight (kg)
GA5201	SRT 0.5	0.5 kVAr THREE-PHASE SHUNT REACTOR	0,5	0,72	1018,6	150 x 125 x 105	Terminal Block	✔	M8	8
GA5202	SRT 1.0	1.0 kVAr THREE-PHASE SHUNT REACTOR	1	1,44	509	150 x 127 x 130	Terminal Block	✔	M8	11,5
GA5203	SRT 1.5	1.5 kVAr THREE-PHASE SHUNT REACTOR	1,5	2,17	339,5	192 x 164 x 144	Terminal Block	✔	M8	14,5
GA5204	SRT 2.5	2.5 kVAr THREE-PHASE SHUNT REACTOR	2,5	3,61	203,72	215 x 265 x 144	Terminal Block	✔	M8	17
GA5205	SRT 5.0	5.0 kVAr THREE-PHASE SHUNT REACTOR	5	7,22	101,86	325 x 260 x 135	Cable Lug (M8)	✔	M8	29
GA5206	SRT 7.5	7.5 kVAr THREE-PHASE SHUNT REACTOR	7,5	10,83	67,9	325 x 260 x 155	Cable Lug (M8)	✔	M8	38
GA5207	SRT 10.0	10.0 kVAr THREE-PHASE SHUNT REACTOR	10	14,43	50,92	380 x 315 x 155	Cable Lug (M10)	✔	M8	48
GA5208	SRT 12.5	12.5 kVAr THREE-PHASE SHUNT REACTOR	12,5	18,04	40,75	380 x 315 x 165	Busbar (M8)	✔	M8	55
GA5209	SRT 15.0	15.0 kVAr THREE-PHASE SHUNT REACTOR	15	21,65	33,95	380 x 315 x 175	Busbar (M8)	✔	M8	63
GA5210	SRT 20.0	20.0 kVAr THREE-PHASE SHUNT REACTOR	20	28,86	25,46	460 x 365 x 175	Busbar (M10)	✔	M10	82
GA5211	SRT 25.0	25.0 kVAr THREE-PHASE SHUNT REACTOR	25	36,08	20,37	460 x 365 x 185	Busbar (M10)	✔	M10	93
GA5212	SRT 50.0	50.0 kVAr THREE-PHASE SHUNT REACTOR	50	72,2	10,18	530 x 420 x 260	Busbar (M10)	✔	M10	173

Product dimensions specified in the table may vary. Please contact us for detailed information.

3. TECHNICAL DRAWING

SVC - Monophase Shunt Reactor (230 V)

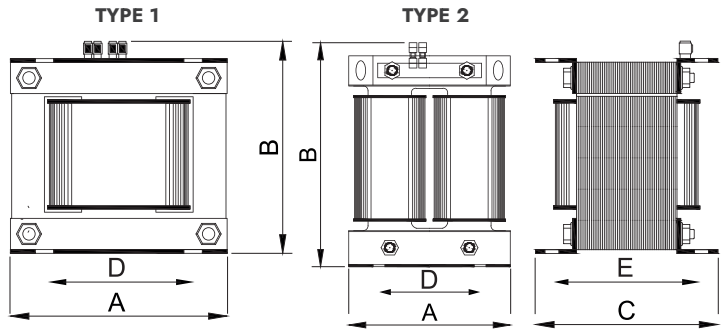

Type 2 applies to SRM 7.5 and SRM 10.0.

· Product sizes indicated in the table may vary.
You can contact for detailed information.

SVC Shunt Reactors

Product Name	A (mm)	B (mm)	C (mm)	D (mm)	E (mm)
SVC-R 1.0	120	100	102	95	75
SVC-R 1.5	150	125	110	105	85
SVC-R 3.0	192	160	134	150	110

Monophase Shunt Reactors (230 V)

Product Name	A (mm)	B (mm)	C (mm)	D (mm)	E (mm)
SRM 1.0	150	125	105	-	-
SRM 1.5	150	125	120	105	95
SRM 3.0	192	160	144	150	120
SRM 5.0	210	270	180	195	119
SRM 7.5	210	280	210	232	126
SRM 10.0	260	330	200	232	136
SRM 15.0	290	380	220	259	136
SRM 20.0	290	380	250	259	156

Three-phase Shunt Reactor (400 V)

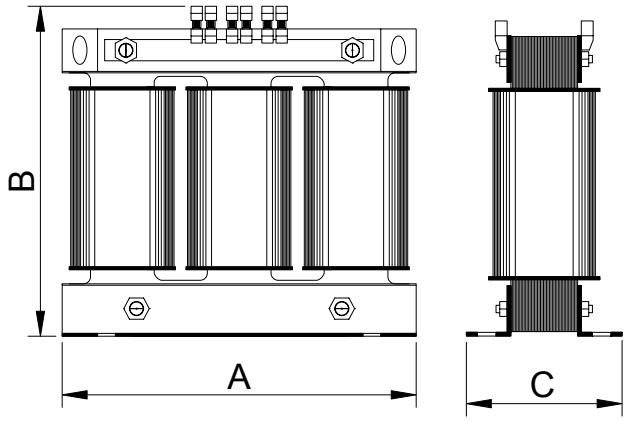

· Product sizes indicated in the table may vary.
You can contact for detailed information.

Product Name	A (mm)	B (mm)	C (mm)	D (mm)	E (mm)
SRT 0.5	150	150	72	100	55
SRT 1.0	180	175	85	125	60
SRT 1.5	180	175	115	125	90
SRT 2.5	240	225	100	175	75
SRT 5.0	295	255	170	200	135
SRT 7.5	295	255	180	200	145
SRT 10.0	370	330	190	350	109
SRT 12.5	390	330	210	350	119
SRT 15.0	390	330	220	350	139
SRT 20.0	460	380	220	420	129
SRT 25.0	460	380	230	420	149
SRT 50.0	520	430	290	510	229

4. CONNECTION DIAGRAM

Monophase Shunt Reactor (230 V)

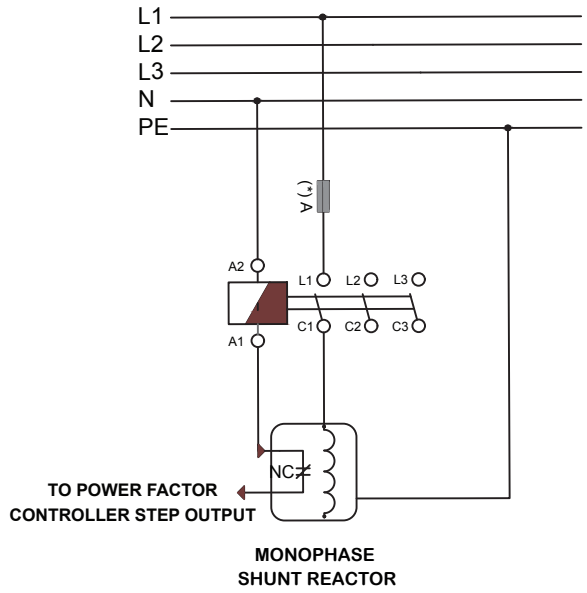

(*)For the recommended fuse current and cable cross-section, please refer to the rated operating current table in the section related to the product of your choice.

Three-phase Shunt Reactor (400 V)

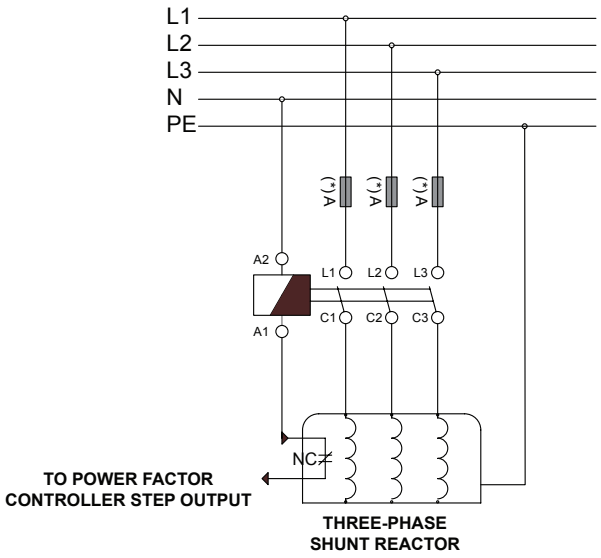

(*)For the recommended fuse current and cable cross-section, please refer to the rated operating current table in the section related to the product of your choice.