COMMERCIAL TITLE

GRUP ARGE ENERJİ ve
KONTROL SİSTEMLERİ
SAN. TİC. LTD. ŞTİ.

PRODUCT CODE

GA51**

PRODUCT NAME

SRM***

PRODUCT DESCRIPTION

MONOPHASE
SHUNT REACTOR

(*)For the recommended fuse current and cable cross-section, please refer to the rated operating current table in the section related to the product of your choice.

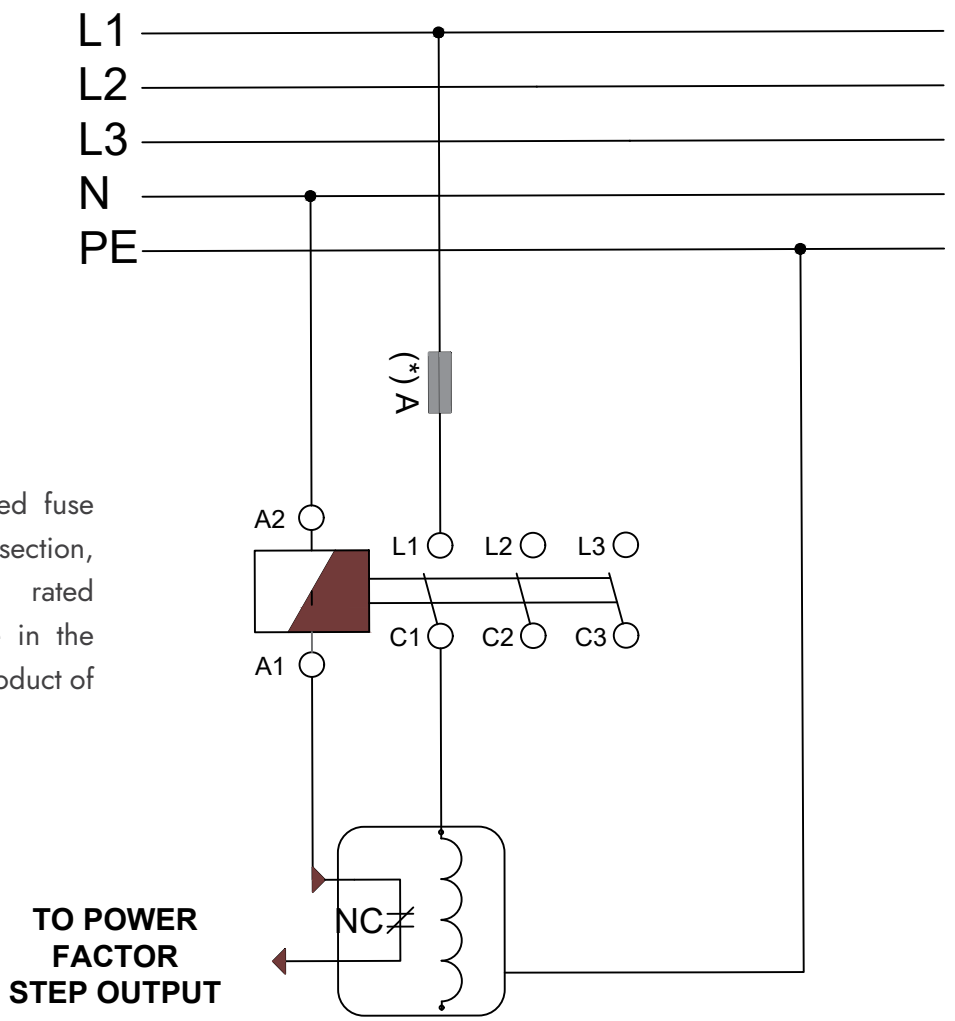

MONOPHASE
SHUNT REACTOR