Harmonic Filter Datasheet



ADDRESS: Ikitelli OSB Mah. Cevre 14. Blok Sok. Telas Blok Dis Kapi No: 1 Kat: 1-2 Basaksehir/Istanbul

Phone: +90 212 438 80 24
Fax: +90 212 438 80 25

info@gruparge.com

V.25.1

1.1. General Features

Under normal conditions, it is required that the mains voltage is in sinusoidal form. However, for various reasons, the mains voltage moves away from the sinusoidal form and high-frequency components called harmonics are formed. When harmonics exceed certain limits, it can cause very dangerous consequences for businesses. For this reason, harmonic filter reactors should be used in compensation panels in enterprises with high harmonics. In this way, both resonance events that are dangerous for the system are prevented and capacitors are protected from the harmful effects of harmonics.

- High Permeability Iron Core, Air Gap Design
- Design in Accordance with EN 61000-2-2, EN 61558-2-1, EN 61558-2-20 Standards
- Thermal Protection Against Overheating in the Middle Leg
- Moisture Protection and Quiet Operation with Vacuum Varnish

1.2. Technical Features

- **Standard:** EN 60076-6, EN 61558-2-20
- **Nominal Voltage:** 230-690 V AC
- **Nominal Power:** 0,5-100 kVAr
- **Nominal Frequency:** 50 Hz
- **Reactor Factor:** %100
- **Inductivity Tolerance:** *%5*
- **Isolation Class:** Class F 155 ˚C
- **Humidity:** %95
- **Cooling:** Natural T40
- **Connection:** Terminal Block, Lug or Busbar
- **Winding Material:** Aluminum or Copper
- **Thermal Protection:** 120 ˚C (NC Contact)
- **Protection Class:** IP00
- **Core:** High Permeability Iron Core, Air Gap

1.3. Technical Drawing

1.3.1. Three-Phase Harmonic Filter (P=%7, THDv<%7 - 189 Hz)

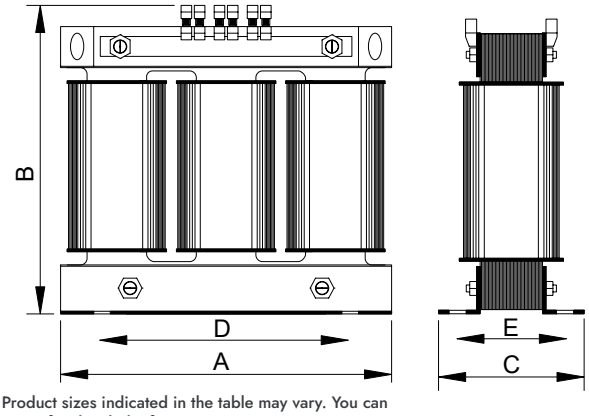

• Product sizes indicated in the table may vary. You can contact for detailed information.

Product Name	A (mm)	B (mm)	C (mm)	D (mm)	E (mm)
HRT 10/7-7	180	175	105	125	80
HRT 12.5/7-7	180	175	105	125	80
HRT 15/7-7	180	175	115	125	90
HRT 20/7-7	240	210	105	175	80
HRT 25/7-7	240	210	105	175	80
HRT 30/7-7	240	210	125	175	100
HRT 40/7-7	240	210	135	175	115
HRT 50/7-7	270	240	135	200	125
HRT 60/7-7	270	240	150	200	125
HRT 75/7-7	295	255	175	200	135
HRT 100/7-7	350	310	180	250	145

1.3.2. Monophase Harmonic Filter (P=%5.67, %7, %14)

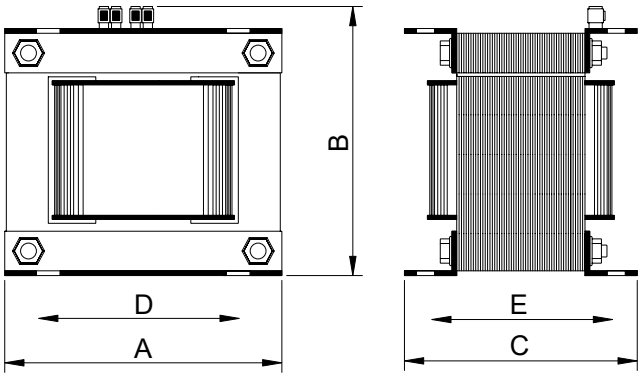

• Product sizes indicated in the table may vary. You can contact for detailed information.

Monophase Harmonic Filter (P=%5.67)

Product Name	A (mm)	B (mm)	C (mm)	D (mm)	E (mm)
HRM 0.5/5.67	84	70	60	70	45
HRM 1.0/5.67	84	70	80	70	65
HRM 1.5/5.67	84	70	80	70	65
HRM 2.5/5.67	96	80	96	80	80
HRM 5.0/5.67	120	100	98	100	80
HRM 7.5/5.67	120	100	120	100	100
HRM 10.0/5.67	150	125	128	125	100

Monophase Harmonic Filter (P=%7)

Product Name	A (mm)	B (mm)	C (mm)	D (mm)	E (mm)
HRM 0.5/7	84	70	60	70	45
HRM 1.0/7	84	70	80	70	65
HRM 1.5/7	84	70	80	70	65
HRM 2.5/7	96	80	96	8	80
HRM 5.0/7	120	100	98	100	80
HRM 7.5/7	120	100	120	100	100
HRM 10.0/7	150	125	110	120	80

Monophase Harmonic Filter (P=%14)

Product Name	A (mm)	B (mm)	C (mm)	D (mm)	E (mm)
HRM 0.5/14	84	70	60	70	45
HRM 1.0/14	84	70	80	70	65
HRM 1.5/14	84	70	100	70	95
HRM 2.5/14	96	80	96	80	80
HRM 5.0/14	120	100	100	100	80
HRM 7.5/14	120	100	120	100	100
HRM 10.0/14	150	125	150	120	120

1.3.3. Three-Phase Harmonic Filter (P=%5.67, %7, %14)

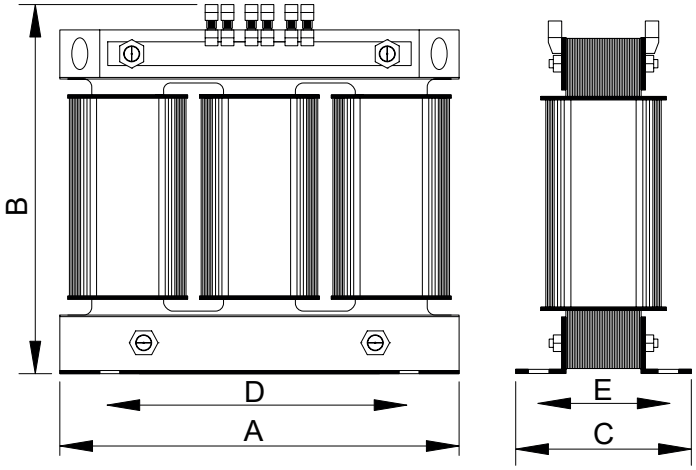

• Product sizes indicated in the table may vary. You can contact for detailed information.

Three-Phase Harmonic Filter (P=% 5.67 - 210 Hz)

Product Name	A (mm)	B (mm)	C (mm)	D (mm)	E (mm)
HRT 0.5/5.67	150	148	72	100	52
HRT 1.0/5.67	150	148	72	100	52
HRT 1.5/5.67	150	148	72	100	52
HRT 2.5/5.67	150	148	72	100	52
HRT 3.12/5.67	150	148	72	100	52
HRT 5.0/5.67	150	148	89	100	70
HRT 6.25/5.67	180	170	97	125	72
HRT 7.5/5.67	180	170	97	125	72
HRT 10.0/5.67	180	180	105	125	80
HRT 12.5/5.67	180	180	105	125	80
HRT 15.0/5.67	235	230	100	175	80
HRT 20.0/5.67	235	230	100	175	80
HRT 25.0/5.67	240	235	120	175	100
HRT 30.0/5.67	270	240	135	200	110
HRT 40.0/5.67	270	240	150	200	125
HRT 50.0/5.67	295	255	165	200	130
HRT 60.0/5.67	295	255	170	200	135
HRT 75.0/5.67	355	310	170	250	135
HRT 100.0/5.67	355	310	190	250	155

Three-Phase Harmonic Filter (P=% 7, THDv<%8 - 189 Hz)

Product Name	A (mm)	B (mm)	C (mm)	D (mm)	E (mm)
HRT 0.5/7-8	150	148	72	100	52
HRT 1.0/7-8	150	148	72	100	52
HRT 1.5/7-8	150	148	72	100	52
HRT 2.5/7-8	150	148	72	100	52
HRT 3.12/7-8	150	148	72	100	52
HRT 5.0/7-8	180	175	85	125	60
HRT 6.25/7-8	180	175	85	125	60
HRT 7.5/7-8	180	175	105	125	80
HRT 10.0/7-8	180	175	115	125	90
HRT 12.5/7-8	180	175	115	125	90
HRT 15.0/7-8	180	175	115	125	90
HRT 20.0/7-8	240	210	105	175	80
HRT 25.0/7-8	240	210	125	175	80
HRT 30.0/7-8	240	210	135	175	110
HRT 40.0/7-8	300	255	145	200	105
HRT 50.0/7-8	270	240	150	200	125
HRT 60.0/7-8	295	255	175	200	135
HRT 75.0/7-8	295	255	205	200	165
HRT 100.0/7-8	355	310	195	250	155

Three-Phase Harmonic Filter (P=% 14 - 134 Hz)

Product Name	A (mm)	B (mm)	C (mm)	D (mm)	E (mm)
HRT 0.5/14	150	150	72	100	55
HRT 1.0/14	150	150	72	100	55
HRT 1.5/14	150	150	72	100	55
HRT 2.5/14	180	175	85	125	60
HRT 3.12/14	180	175	85	125	60
HRT 5.0/14	180	175	115	125	90
HRT 6.25/14	180	175	115	125	90
HRT 7.5/14	240	225	100	175	75
HRT 10.0/14	240	225	100	175	75
HRT 12.5/14	240	225	100	175	75
HRT 15.0/14	240	225	110	175	85
HRT 20.0/14	270	240	135	200	110
HRT 25.0/14	270	240	150	200	125
HRT 30.0/14	295	255	165	200	130
HRT 40.0/14	295	255	170	200	135
HRT 50.0/14	300	255	180	200	145
HRT 60.0/14	355	310	190	250	155
HRT 75.0/14	355	310	210	250	175
HRT 100.0/14	400	360	210	250	175

1.4. Connection Diagram

1.4.1. Monophase Harmonic Filter (P=%5.67, %7, %14)

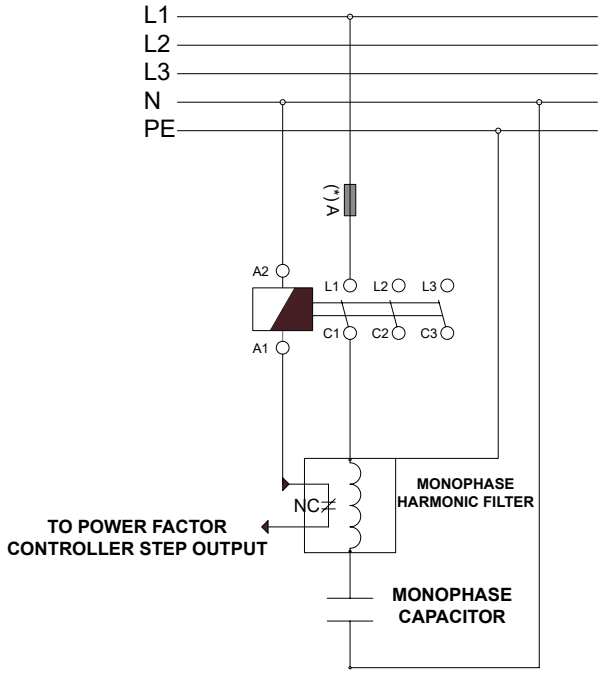

(*)For the recommended fuse current and cable cross-section, please refer to the rated operating current table in the section related to the product of your choice.

1.4.2. Three-Phase Harmonic Filter (P=%5.67, %7, %14)

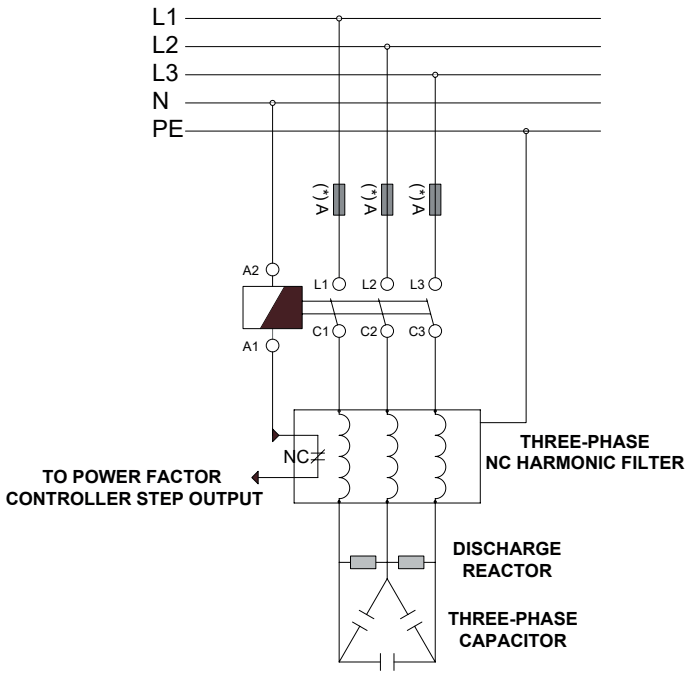

(*)For the recommended fuse current and cable cross-section, please refer to the rated operating current table in the section related to the product of your choice.