COMMERCIAL TITLE

GRUP ARGE ENERJİ ve KONTROL SİSTEMLERİ SAN. TİC. LTD. ŞTİ.

PRODUCT CODE

GA312*

PRODUCT NAME

HT G2*

PRODUCT DESCRIPTION

GSM and 4G AUTOMATION TERMINAL (MODBUS)

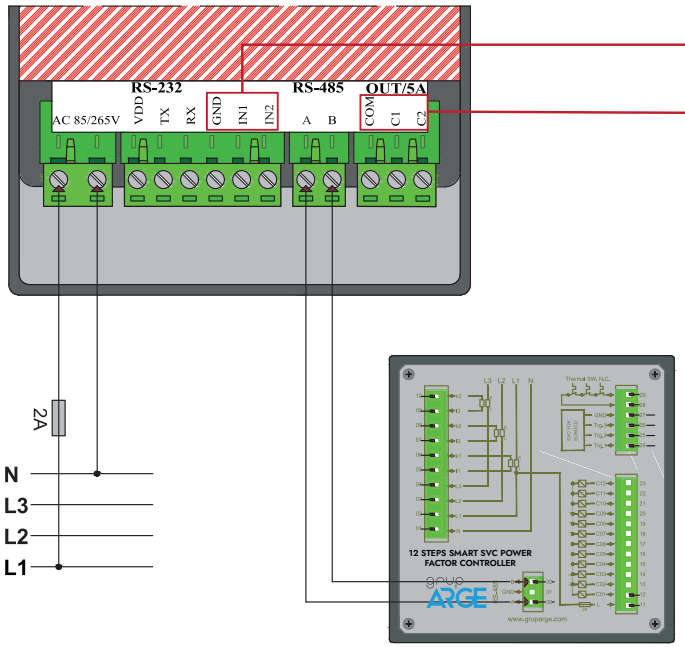

Input Connection Diagram

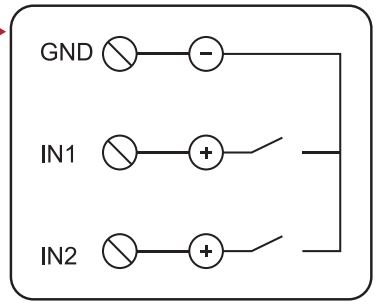

Output Connection Diagram

