GSM and 4G Automation Terminals Datasheet



ADDRESS: Ikitelli OSB Mah. Cevre 14. Blok Sok. Telas Blok Dis Kapi No: 1 Kat: 1-2 Basaksehir/Istanbul

Phone: +90 212 438 80 24
Fax: +90 212 438 80 25

info@gruparge.com

V.25.1

1.1. General Features

HT G21 GSM Automation Terminal and HT G24 4G Automation Terminal are products developed for remote monitoring of electronic electricity meters.They communicate with electricity meters via optical ports, RS-232 (3-wire), or RS-485 (2-wire) communication interfaces.

HT G22/G23 GSM Automation Terminal and HT G25/G26 4G Automation Terminal are designed for the remote monitoring of devices such as power factor controllers and energy analyzers that support the MODBUS protocol. Communication with these devices is typically established via the RS-485 port.
HT G21/G22/G24/G25 models operate with a power supply of 85–265 V AC; HT G23/G26 models operate with a 10–30 V DC power supply.

To enable internet connectivity, communication terminals require a SIM card with 100 MB data capabilities at least . If the SIM card has a PIN code, it must be inserted into a mobile phone and the PIN code must be disabled.

HT G21/G22/G23 GSM Automation Terminals query the connected devices and transmit the data via the GSM network (cellular network), HT G24/G25/G26 4G Automation Terminals transmit the data to the Grup Arge servers using the 4G network (if available) or fallback to GSM.By logging into your user account at www.enerjitakibi.com, you can access all device data via the web interface.

The main reports provided by the web interface include:
• Active energy consumption reports
• Reactive power ratio reports
• Instantaneous electrical parameters (e.g., current, voltage)
• Step values (Only for Power Factor Controller)
In certain alarm conditions, the system can notify relevant personnel via email or SMS alerts.

1.2. Technical Features

- Microprocessor based.
- HT G21/G22/G24/G25 models detect power outages and report them to the central system. (Note: HT G23/G26 models do not support this feature.)
- Models with AC supply (HT G21/G22/G24/G25) support an input voltage range of 85–265 V AC.
- Models with DC supply (HT G23/G26) support an input voltage range of 10–30 V DC.
- Supports communication interfaces including RS-485 (Standard Modbus RTU protocol), RS-232, and optical ports.
- Compatible with all meters supporting the TS EN 62056-21 protocol.
- Can read up to 32 meters via RS-232, and up to 247 Modbus devices via RS-485.

- Equipped with LED indicators for RS-485/Optical/RS-232 (Communication), Output, Input, GSM connection, and Internet status.
- Data transmission interval is configurable between 1 to 240 minutes.
- Operates without requiring a static IP address.
- Includes 2 dry contact digital inputs and 2 relay outputs (5 A each).
- Supports external antenna option for areas with weak network signal.
- Fully compatible with M2M data SIM cards from all GSM operators.
- Operating temperature range: –10 °C to +55 °C.
- Power consumption: less than 1 VA.
- IP40 enclosure protection rating.
- Device dimensions (Width x Height x Depth): 90 x 57 x 160 mm.

1.3. Connection Diagrams

1.3.1. Input Connection Diagram

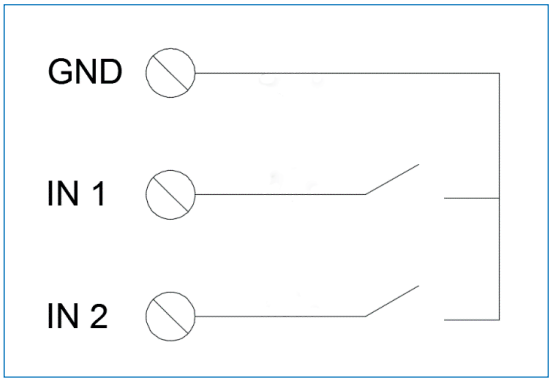

- GND is used as the common terminal for the input connections.
- When the dry contact connected to IN 1 is closed, the IN 1 LED will turn on.
- When the dry contact connected to IN 2 is closed, the IN 2 LED will turn on.

NOTE:If the modem’s digital input/output features are to be used, enter the modem settings via the web interface and ensure the "I/O Support Enabled" option is activated.

NOTE :Changes in input states can be monitored via the web interface. Notifications can also be sent to predefined email addresses and SMS recipients.

NOTE :Based on input states, the relay output of another modem can also be automatically controlled. This feature is particularly suitable for well–tank automation systems.

1.3.2. Output Connection Diagram

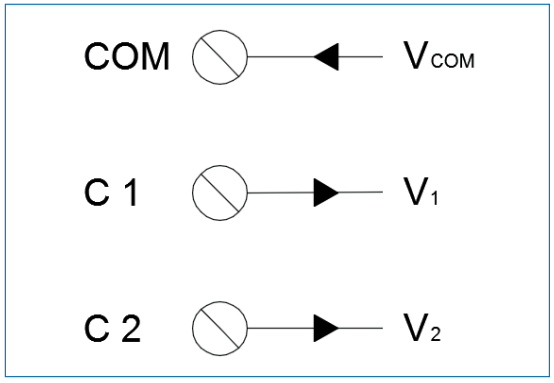

• When Relay C1 is active, V_1 = VCOM.
• When Relay C2 is active, V_2 = VCOM.
• VCOM must be less than 250 V.

NOTE

• Loads drawing more than 5A should not be directly connected to relay outputs; they must be driven through a contactor.
• Relay outputs can be controlled manually via the web interface, or automatically based on a user-defined schedule.

1.4. Technical Drawing

