HT E21 / E22
Ethernet Terminal
Datasheet



ADDRESS: Ikitelli OSB Mah. Cevre 14. Blok Sok. Telas Blok Dis Kapi No: 1 Kat: 1-2 Basaksehir/Istanbul

Phone: +90 212 438 80 24
Fax: +90 212 438 80 25

info@gruparge.com

V.25.1

1.1. General Features

HT E21 and HT E22 Ethernet communication terminals are designed for remote monitoring of electronic electricity meters and devices such as power factor controllers and energy analyzers that support Modbus protocol. It provides communication with electricity meters via optical, RS-232 (3-wire) or RS-485 (2-wire) communication ports, and with devices with Modbus protocol via RS-485 port.

In order for the communication terminal to establish an internet connection, it must be connected to the company's internet network via an Ethernet cable. If the cable distance will exceed 70 meters, CAT-6 cable should be preferred. If dynamic IP is distributed with DHCP on the network to which the device is connected, it will automatically receive IP and try to access the internet. If DHCP is turned off, a static IP setting should be made by connecting to a computer via the USB port of the device.

The required setting program can be downloaded from the Documents -> Software section of our website at www.gruparge.com. HT E21 and HT E22 communication terminals query the data on the devices to which they are connected and send it to the Grup Arge servers via the company's internet network.

With the user account provided to you, you can access the data of all your devices by visiting our website at www.enerjitakibi.com

The main reports presented on the web interface are as follows:

- Active Consumption Reports
- Reactive Rate Reports
- Instant Electrical Parameters Such as Current, Voltage
- Step Values (Only for Power Factor Controllers)

In addition, in certain alarm situations, the system notifies the relevant persons via e-mail and SMS alerts.

1.2. Basic Features

- Microprocessor based.
- HT E21 Ethernet Terminal operates with 85-265 V AC supply.
- HT E22 Ethernet Terminal operates with 10-30 V DC supply.
- RS-485 Standard Modbus RTU protocol supports RS-232 and optical port communication channels.
- It can communicate with all meters that support TS EN 62056-21 protocol.
- 32 meters or 247 MODBUS devices can be read via RS-485 and 1 Modbus device can be read via RS-232.
- One meter can be read via optical reader and RS-232.

- It has LEDs indicating USB, Power, RS-485/Optical (Communication), IP and Internet status.
- Data sending period can be set between 1-240 minutes.
- It has a system architecture that does not require static IP. In cases where static IP is mandatory, the necessary settings can be made via the USB port on it.
- The operating ambient temperature of the device is between -10 °C and +55 °C.
- Supply consumption power is less than 1 VA.
- It has IP40 protection class.
- The dimensions of the device are (Width-Length-Depth) 35 x 110 x 80 mm.

2. SUPPLY CONNECTIONS

2.1. AC Supply Connections

2.2. DC Supply Connections

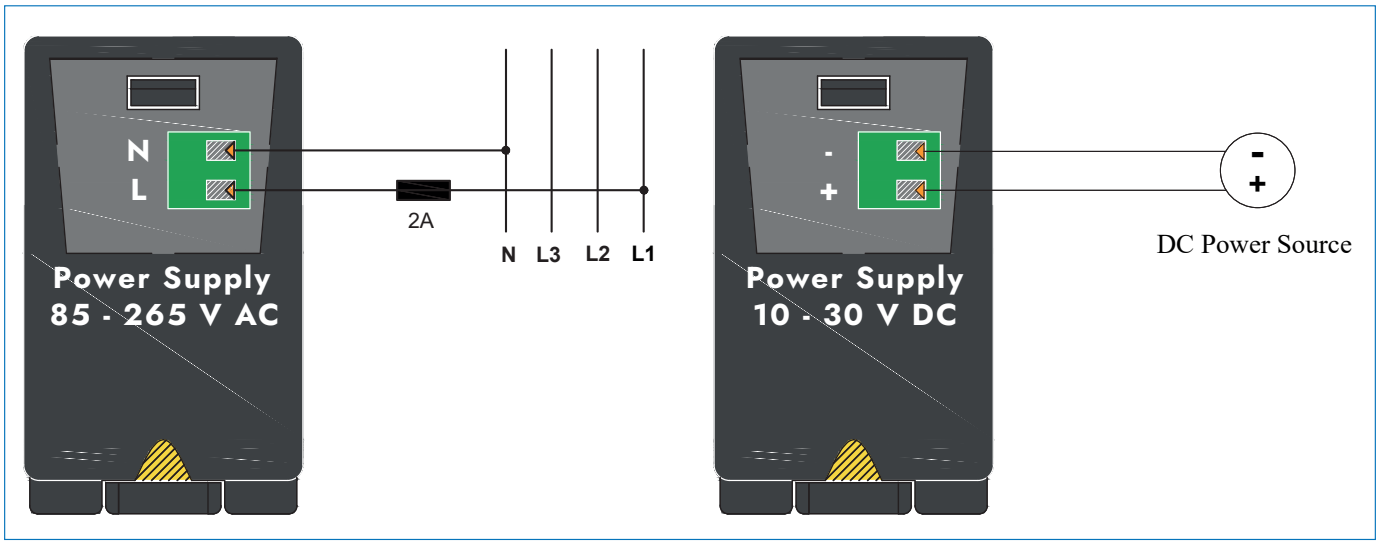

Figure 1

Figure 2

3. TECHNICAL DRAWING

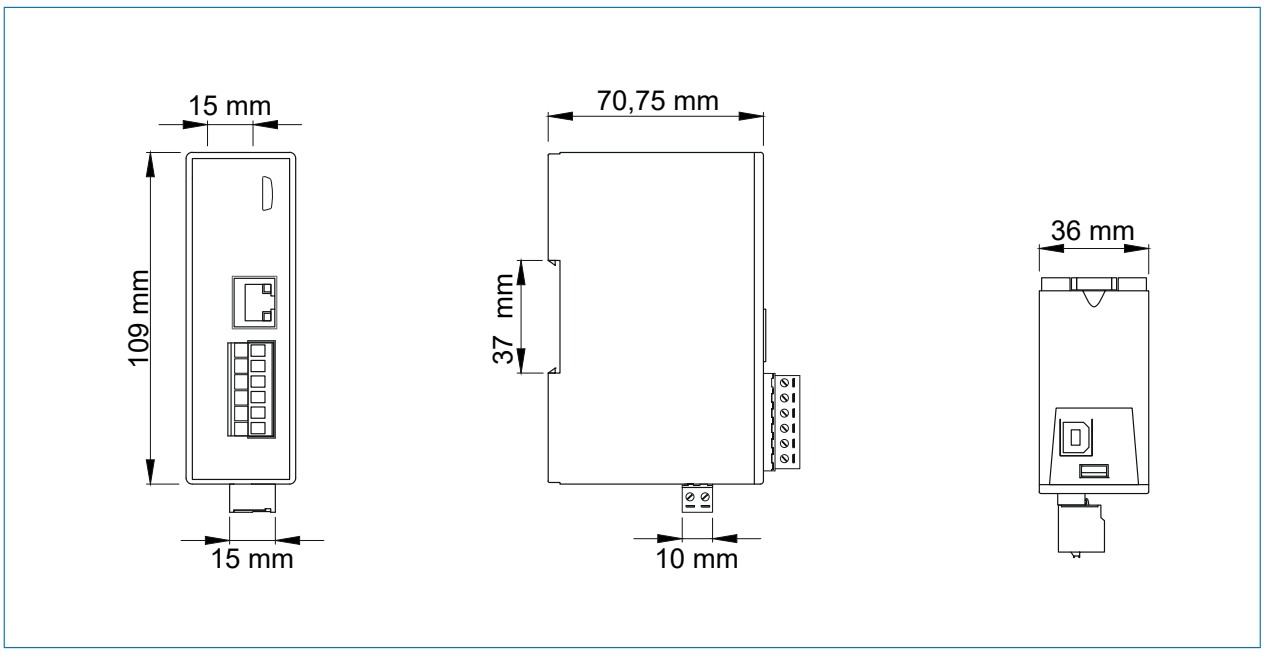

Figure 3