2024

PRODUCT CATALOG

grup ARGE

ENERGY AND CONTROL SYSTEMS

WHAT DO WE DO?

POWER FACTOR CORRECTION

We produce full and permanent solutions to reactive energy problems in businesses, with our innovative and intelligent products. This helps to reduce production and distribution infrastructure costs as businesses get rid of the reactive energy price.

ENERGY MEASUREMENT

Energy measurements for businesses need to be carried out in a healthy manner. Our power meters also provide remote monitoring and intervention via communication and contact outputs.

ENERGY MANAGEMENT

We offer different energy efficiency services with our new generation energy management system where the energy consumption of devices in enterprises can be monitored or controlled instantly with our web - based system.

CONTROL AND PROTECTION

Our control and protection product portfolio is designed to ensure the safe and effective operation of electrical systems, protect devices and manage the flow of energy.

CONTENTS

POWER FACTOR CORRECTION 5
Power Factor Controllers 6
Classic Power Factor Controllers 7
SVC - Enabled Power Factor Controllers 10
Power Factor Controllers with Thyristor Output 13
MV Referenced Power Factor Controllers 15

Switching 17
SVC Drivers 18
Capacitive Static Contactors 21
Inductive Static Contactors 25
Compensation Contactors 28

Shunt and Harmonic 30
Shunt Reactors 31
Harmonic Filters 34

Capacitor/Discharge Product
Load Breaker/Bladed Fuse 42
Capacitors 43
Discharge Products 46
NH Fused Load Breakers 47
NH Blade Fuses 48

ENERGY MEASUREMENT 51
Analyzers 52
Multimeters 55
Voltmeters 56
Ammeters 57
XLPE Cable Type Current Transformers 58
LV Current Transformers 60

ENERGY MANAGEMENT AND AUTOMATION 67
GSM Terminals 68
Ethernet Terminals 70
GSM Automation Terminals 72
Additional Connection Products 74
Monitoring Software 75
Automation Modules 82

CONTROL AND PROTECTION 89
Astronomical Time Relays 90
Time Relays 91
Voltage Protection Relays 93
Phase Protection Relays 94

POWER FACTOR CORRECTION

Electrical energy needs to be transported with least loss in its distribution from the power plant to the smallest receiver. One of the processes to reduce these energy losses and get maximum electrical energy efficiency is the compensation process.

Power Factor Controller 6
Classic Power Factor Controllers 7
SVC - Enabled Power Factor Controllers 10
Power Factor Controllers with Thyristor Output 13
MV Referenced Power Factor Controllers 15

Switching 17
SVC Drivers 18
Capacitive Static Contactors 21
Inductive Static Contactors 25
Compensation Contactors 28

Shunt and Harmonic 30
Shunt Reactors 31
Harmonic Filters 34

Capacitor/Discharge Product Load Breaker/Bladed Fuse 42
Capacitors 43
Discharge Products 46
NH Fused Load Breakers 47
Blade Fuses 48

POWER FACTOR CONTROLLER

Power Factor Controller

The power factor controllers produced by our company have been developed with the experience and knowledge gained over many years to provide innovative and permanent solutions according to the needs of today's businesses.

Our classic power factor controllers, which are offered with 12, 18 and 24 steps options, are sufficient for businesses where loads are somewhat more stable.

SVC-enabled power factor controllers provide effective solutions in enterprises where loads are variable, phases are unbalanced and capacitive characteristic loads are predominant.

In enterprises where there are fast variable loads, power factor controllers with thyristor output can be used, as it is not possible to respond by switching with mechanical contactors.

MV Referenced smart power factor controllers, where the current is measured from the medium voltage line, provide complete and precise results in enterprises where the meter is installed at medium voltage side and consumption is low according to transformer power.

Key Features

- **Measurement Accuracy:** (Cl): 0.5
- **Protection Class:** IP40
- **Measurement Current Range:** 3 mA – 5.5 Amps
- **Power Factor Controller Contact Output:** 3A – 240 V AC
- **Operating Frequency:** 50 – 60 Hz
- **Power Consumption:** 0.7 – 3.7 VA
- **Generator Input:** 110 – 250 V AC (for 18 - steps power factor controllers)
- **Power Consumption:** 0.7 – 3.7 VA
- **Setting Limit:** Ind: 1% - 100%, Cap: 1% - 100%
- **Current Transformer Ratio:** 5/5....10.000 / 5A
- **Ambient Temperature:** -10'C / +60'C
- **Operating Voltage:** 230 V AC (Phase - Neutral), 400 V AC (Phase - Phase).
- **Operating Voltage Range:** (0.8 – 1.1) xU

Power Factor Controllers;

- 3mA detection current.
- High accuracy power measurement.
- Reactive Power Profile (RPP) property.
- Extend step service life with step co-aging.
- Updating the step values with automatic step test.

with such features, it produces economical and permanent solutions for your business.

The reactive energy requirement in enterprises where the loads in the enterprises are not variable and the load imbalance between phases can be eliminated with a small number of single-phase steps can be responded with classical smart power factor controllers. According to the number of steps required by the enterprise, an effective result can be obtained by choosing the appropriate 12-18 steps smart power factor controllers and 12 - 18 - 24 steps power factor controllers.

Application Areas

- Trading Houses
- Markets
- Small-Scale Enterprises
- Small Workshops

RKR 18

Smart 12

Smart 18

Technical Features

Product Code	Product Name	Product Description	Step Count	Character LCD	Graphic LCD	7-Segment (3x4)	Power Flow Graph	RS-485 Communication	Generator Trigger
GA110	SMART 12	12 STEPS SMART POWER FACTOR CONTROLLER	12	✓			✓	✓	
GA122	SMART 18	18 STEPS SMART POWER FACTOR CONTROLLER	18		✓		✓	✓	✓
GA1101	RKR 12	12 STEPS POWER FACTOR CONTROLLER	12			✓	✓	✓	✓
GA1102	RKR 18	18 STEPS POWER FACTOR CONTROLLER	18			✓	✓	✓	✓
GA1103	RKR 24	24 STEPS POWER FACTOR CONTROLLER	24			✓	✓	✓	✓

Technical Drawing

Smart 12 Power Factor Controller

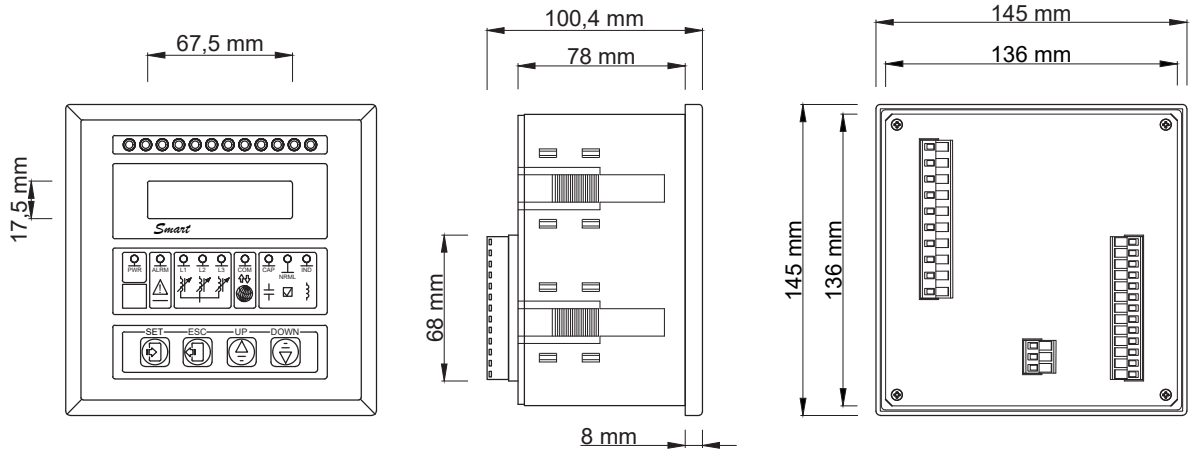

Front View Side View Back View

Smart 18 Power Factor Controller

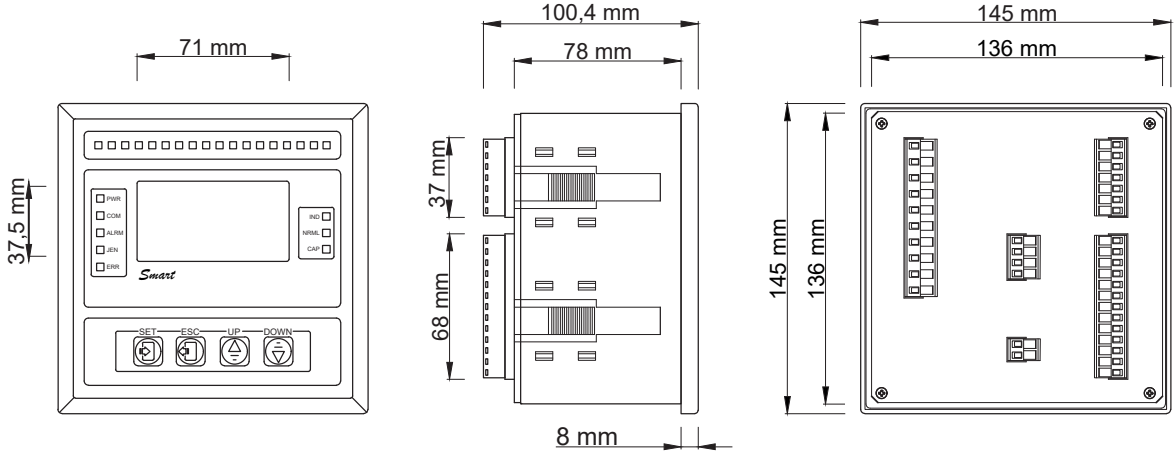

Front View Side View Back View

Technical Drawing

RKR (12/18/24) Power Factor Controller

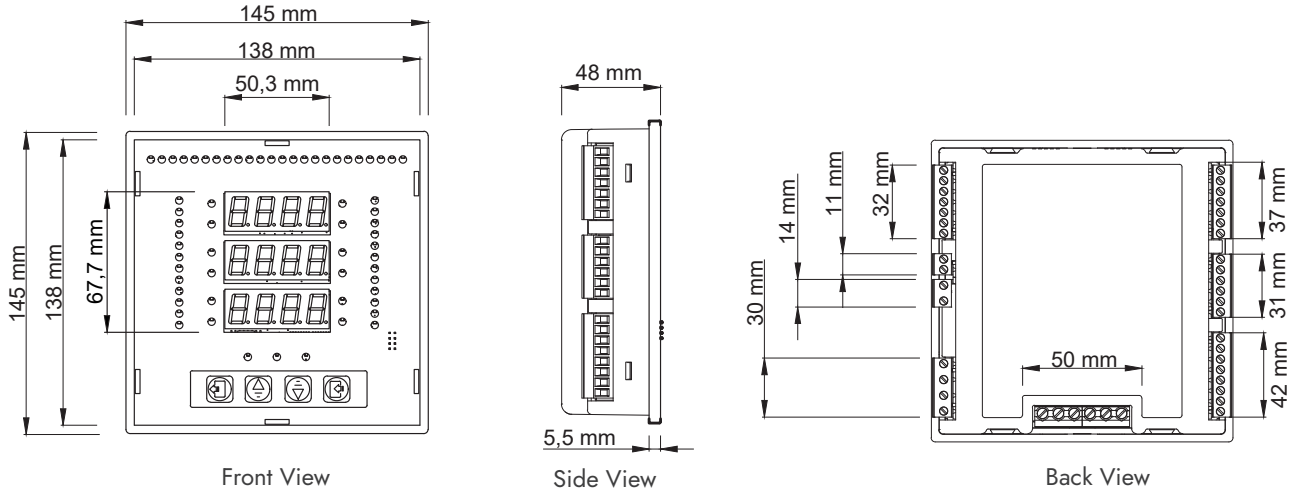

Connection Diagram

Smart 12 Power Factor Controller

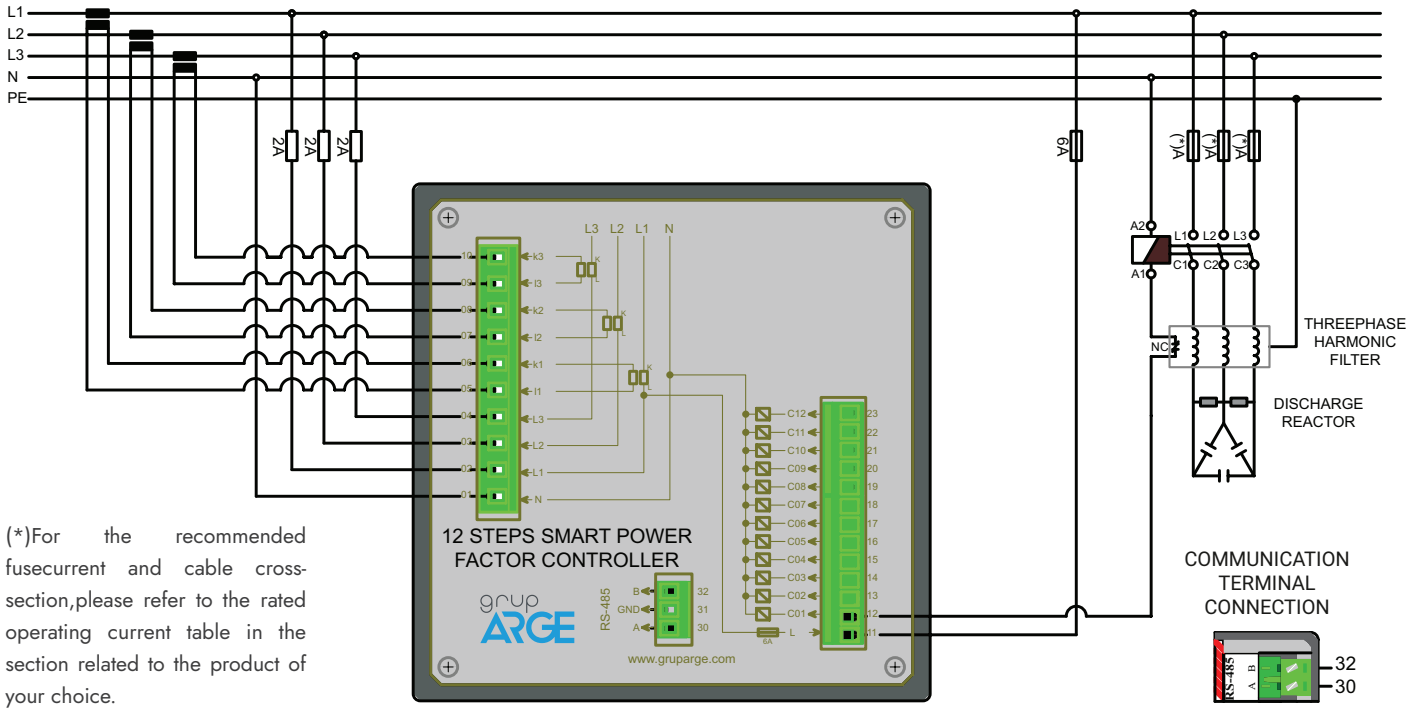

(*)For the recommended fusecurrent and cable cross-section,please refer to the rated operating current table in the section related to the product of your choice.

Connection Diagram

Smart 18 Power Factor Controller

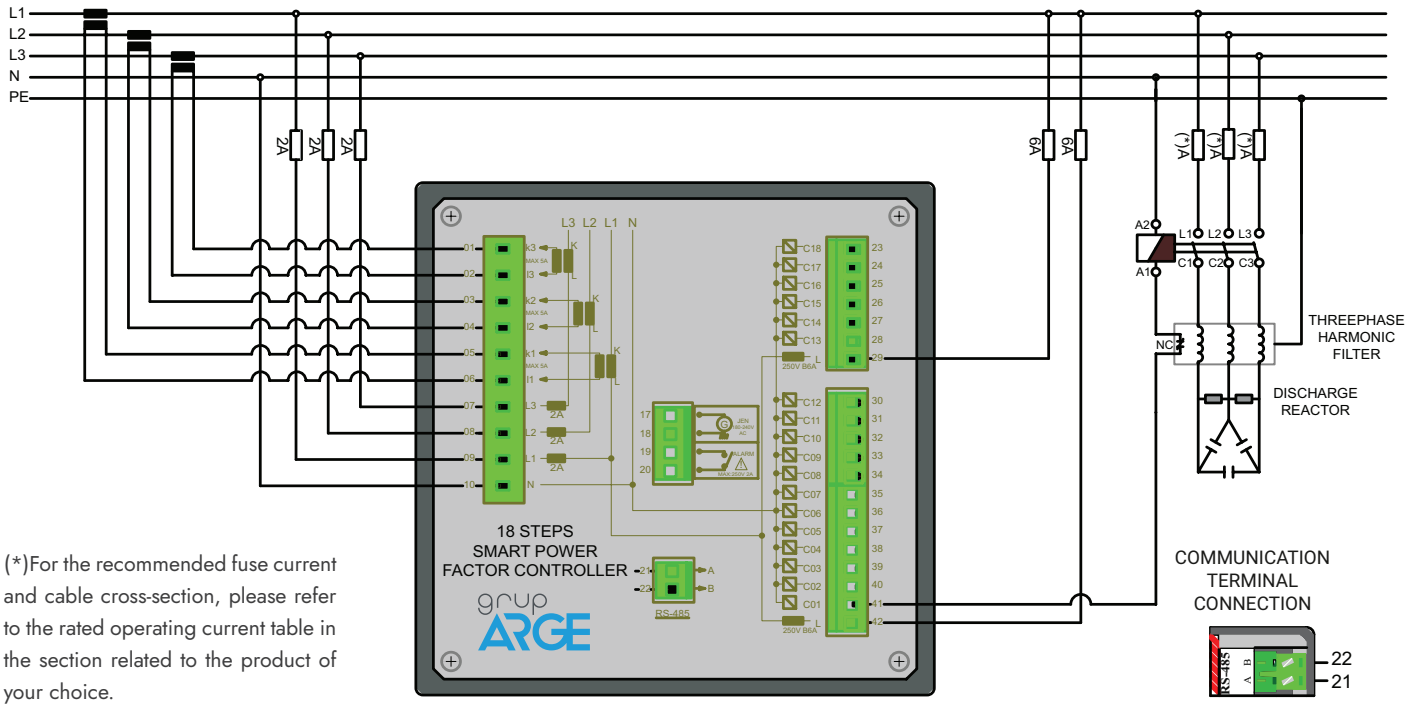

(*)For the recommended fuse current and cable cross-section, please refer to the rated operating current table in the section related to the product of your choice.

RKR (12/18/24) Power Factor Controller

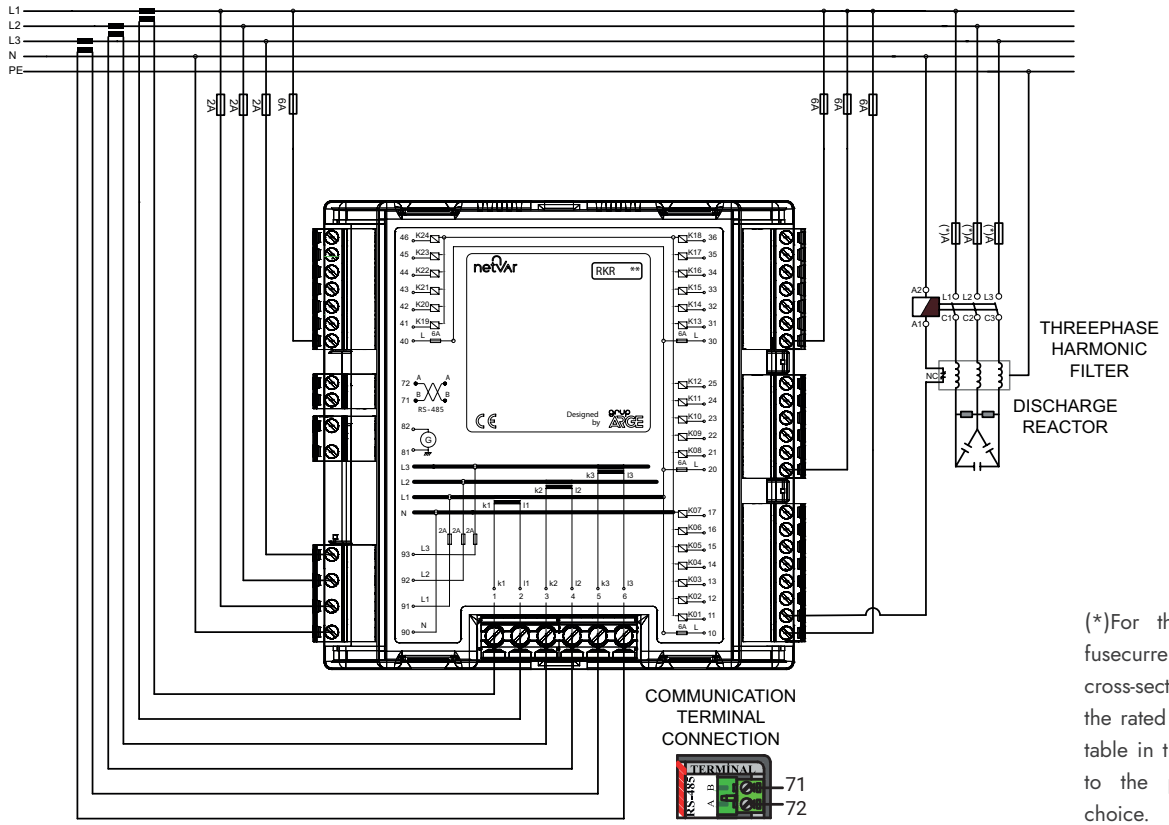

(*)For the recommended fusecurrent and cable cross-section,please refer to the rated operating current table in the section related to the product of your choice.

In order to meet the reactive energy requirement of the enterprises where the loads are variable and the phase distribution is not equal and the capacitive load generating device equipment is predominant, SVC power factor controllers that activate the inductive loads in an adjustable way should be used. The magnitude of the inductive load driver and monophase shunt reactor to be used in the SVC system in the enterprise may vary according to the inductive load requirement and load imbalance of the enterprise.

Application Areas

- Banks
- Petrol Stations
- Süpermarkets
- Hospitals
- Schools
- Elevator Systems
- Public Buildings
- Offices
- Shopping Centers
- Social Facilities

RKR S18

Smart S12

Smart S18

Technical Features

Product Code	Product Name	Product Description	Step Count	Character LCD	Graphic LCD	TFT Color Display	Harmonic Measurment	SVC	Power Flow Graph	Reactive Power Profile	RS-485 Communcation	Generator Trigger
GA111	SMART S12	12 STEPS SMART SVC-ENABLED POWER FACTOR CONTROLLER	12 + SVC	✓				✓	✓		✓	
GA121	SMART S18	18 STEPS SMART SVC-ENABLED POWER FACTOR CONTROLLER	18 + SVC		✓			✓	✓		✓	✓
GA1201	RKR S12	12 STEPS SVC-ENABLED POWER FACTOR CONTROLLER	12 + SVC			✓	63	✓		✓	✓	✓
GA1202	RKR S18	18 STEPS SVC-ENABLED POWER FACTOR CONTROLLER	18 + SVC			✓	63	✓		✓	✓	✓

Technical Drawing

Smart S12 SVC - Enabled Power Factor Controller

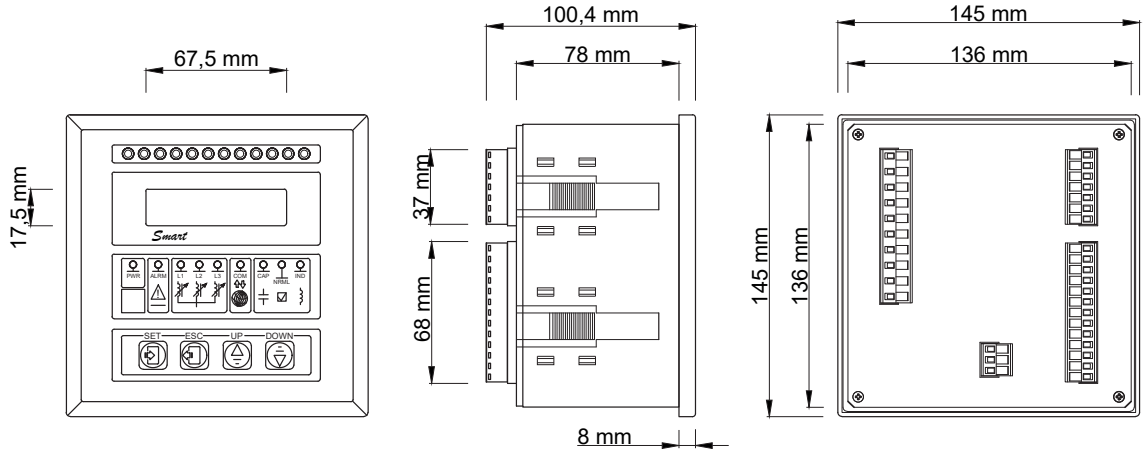

Front View
Side View
Back View

Smart S18 SVC - Enabled Power Factor Controller

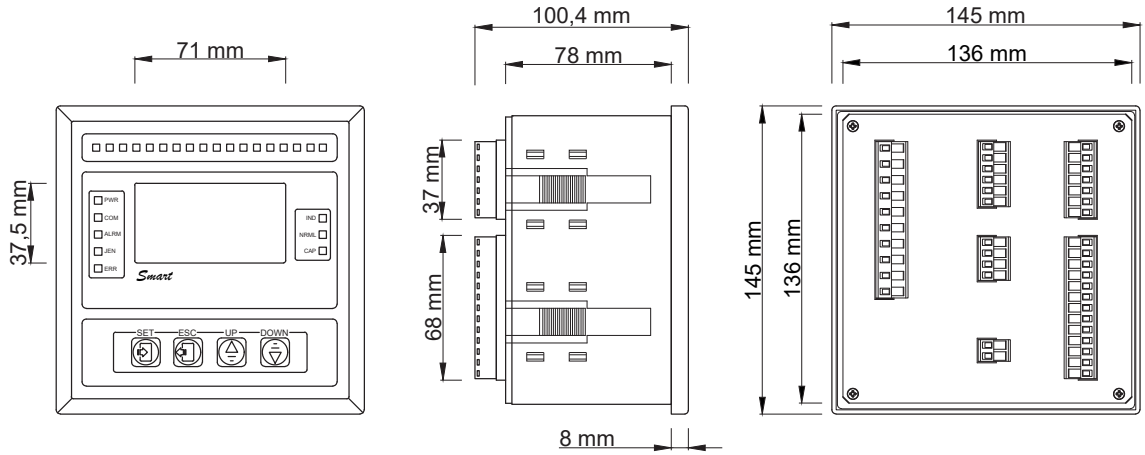

Front View
Side View
Back View

Technical Drawing

RKR S(12/18/24) SVC - Enabled Power Factor Controller

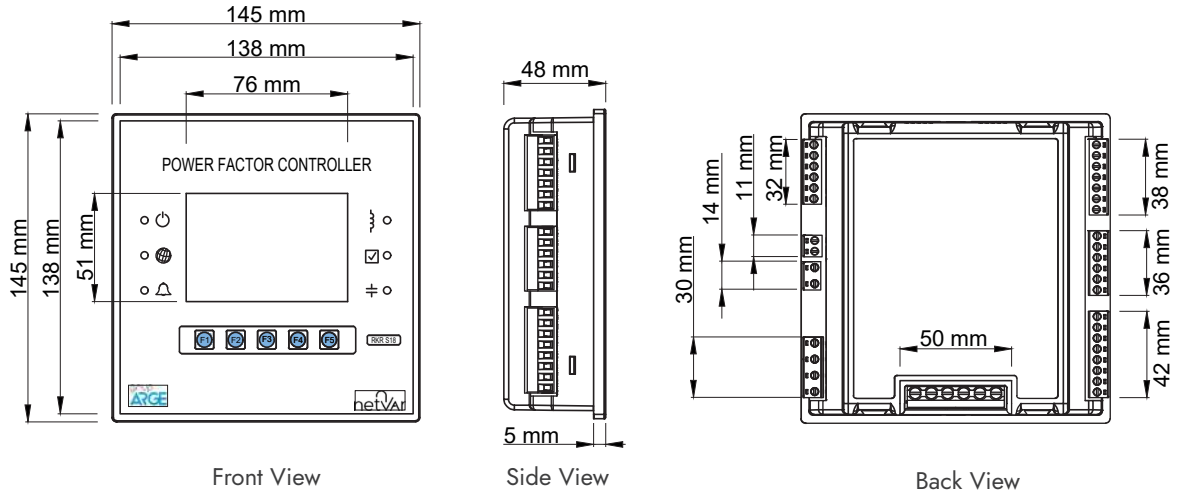

Connection Diagram

Smart S12 SVC - Enabled Power Factor Controller

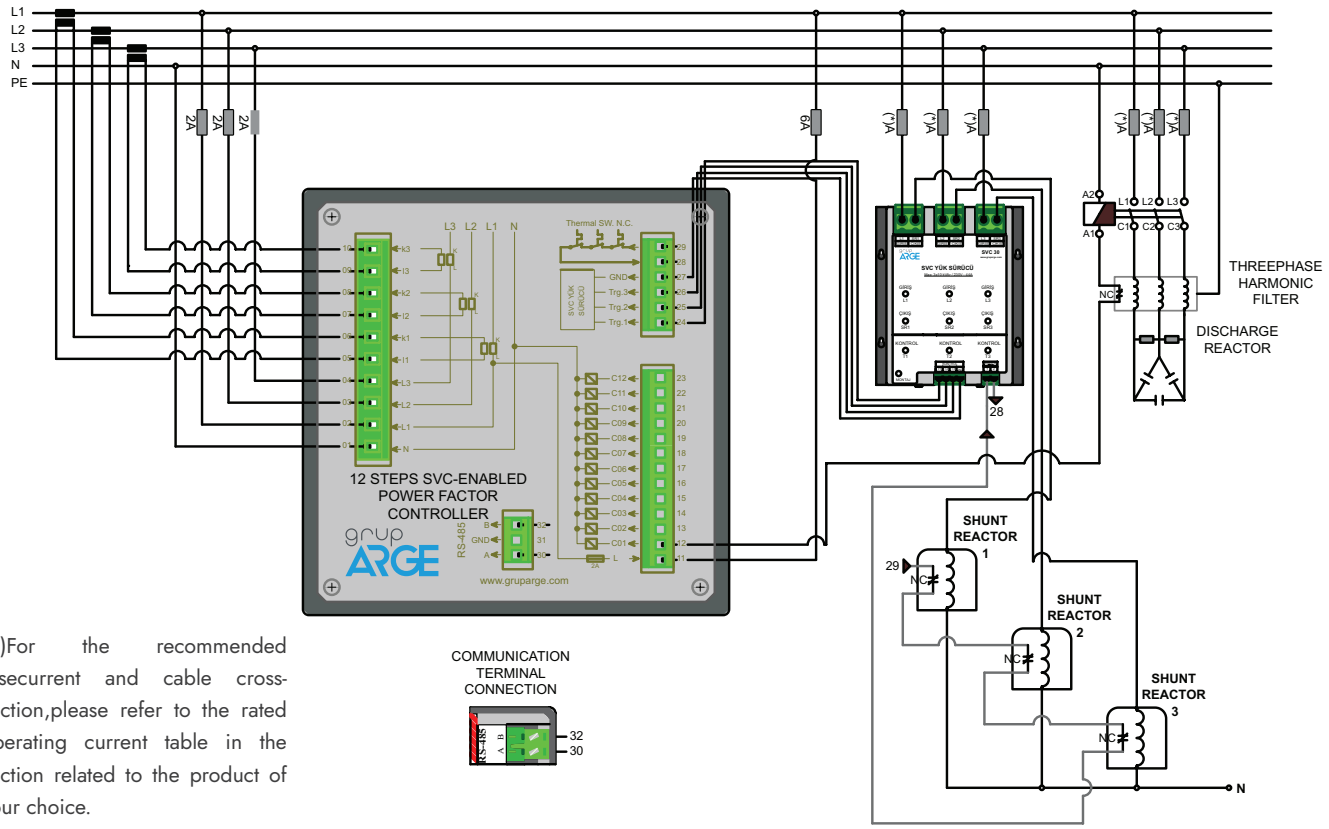

(*)For the recommended fusecurrent and cable cross-section,please refer to the rated operating current table in the section related to the product of your choice.

Connection Diagram

Smart S18 SVC - Enabled Power Factor Controller

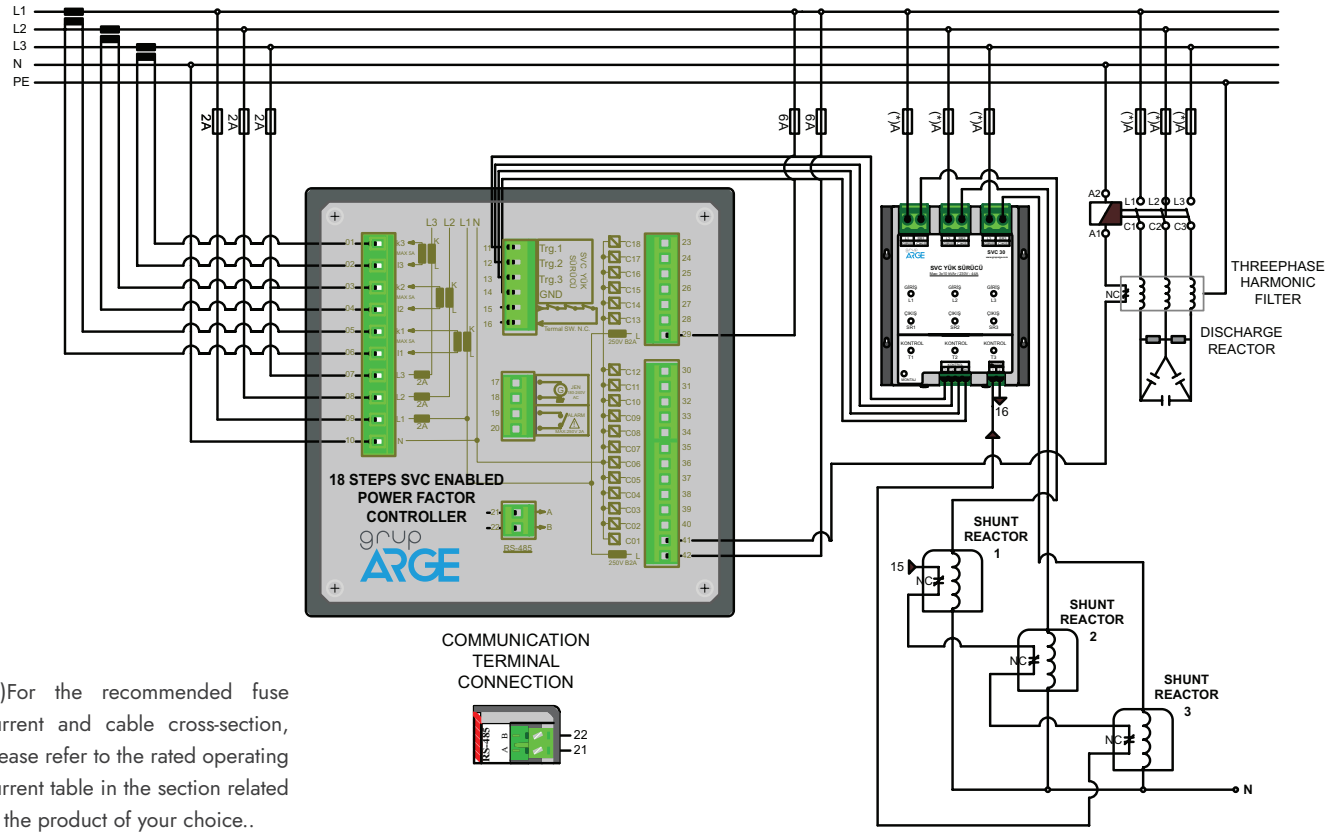

(*)For the recommended fuse current and cable cross-section, please refer to the rated operating current table in the section related to the product of your choice..

SVC - Enabled Power Factor Controller

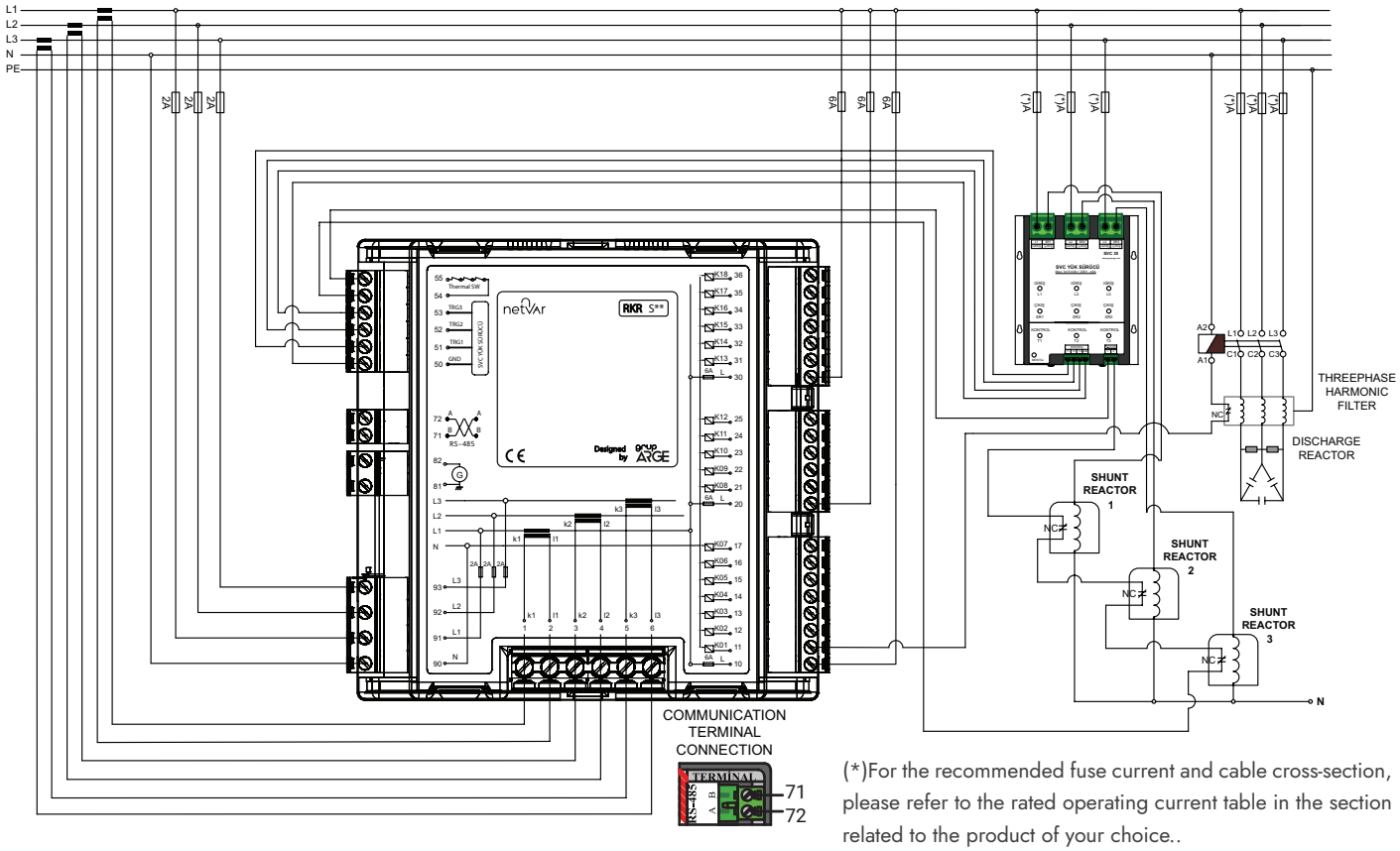

(*)For the recommended fuse current and cable cross-section, please refer to the rated operating current table in the section related to the product of your choice..

POWER FACTOR CONTROLLER WITH THYRISTOR OUTPUT

It is not possible to respond to fast variable loads by switching with mechanical contactors in classical systems. Such enterprises can only be answered by switching with a thyristor. For this purpose, smart power factor controllers with thyristor output should be used.

Application Areas

- Elevator Systems
- CNC Machine Tools
- Lathe - Leveling Workshops
- Workshops Where the Machines Are Located
- Press, Spot and welding

Smart S18-T

Smart 22-T

Technical Features

Product Code	Product Name	Product Description	Step Count	Character LCD	SVC	Power Flow Graph	TSC
GA120	SMART S18-T	18 STEPS SMART SVC-ENABLED POWER FACTOR CONTROLLER WITH THYRISTOR OUTPUT	18 + SVC	✓	✓	✓	✓
GA130	SMART 22-T	22 STEPS SMART POWER FACTOR CONTROLLER WITH THYRISTOR OUTPUT	22	✓		✓	✓

Technical Drawing

Smart S18-T and Smart 22-T Power Factor Controllers

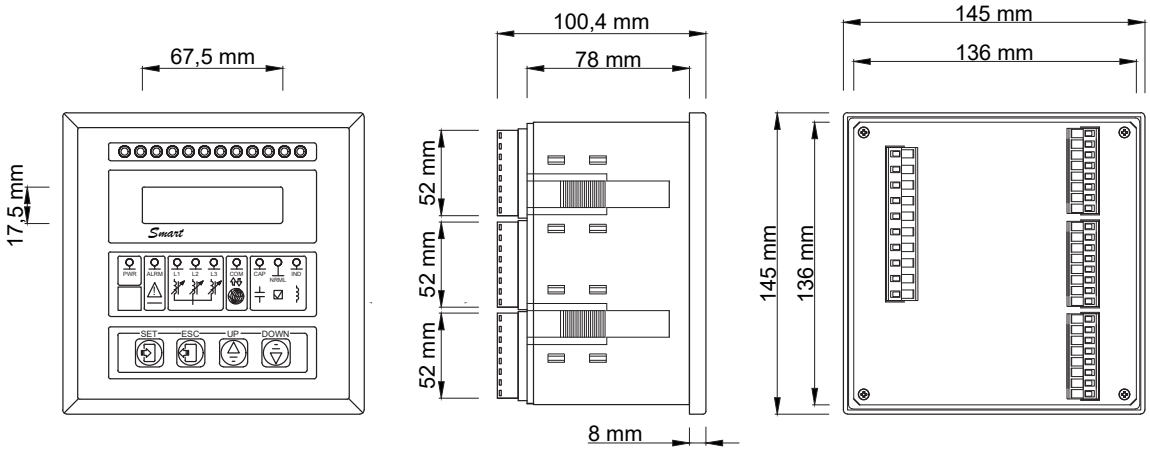

Front View Side View Back View

Connection Diagram

Smart S18-T SVC - Enabled Power Factor Controller With Thyristor Output

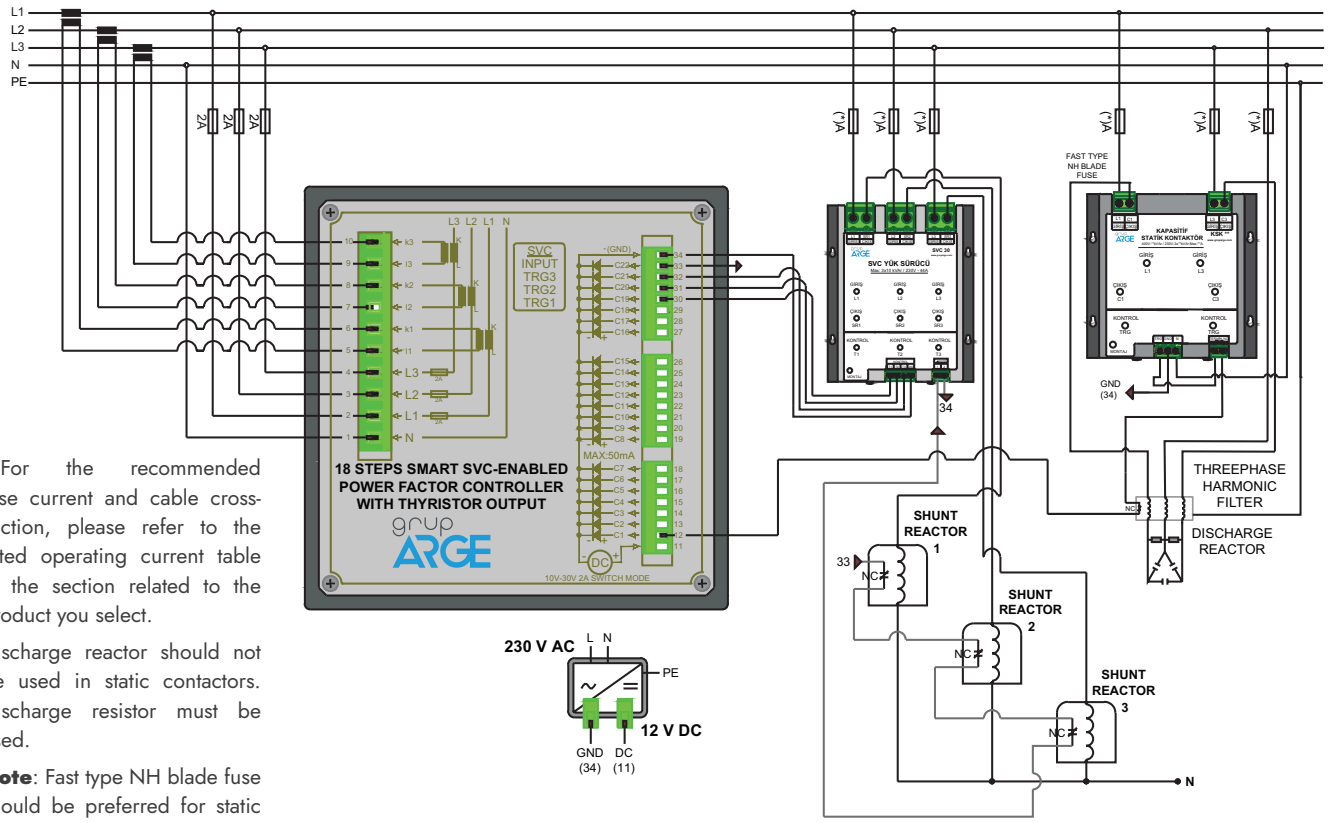

*)For the recommended fuse current and cable cross-section, please refer to the rated operating current table in the section related to the product you select.

Discharge reactor should not be used in static contactors. Discharge resistor must be used.

Note: Fast type NH blade fuse should be preferred for static contactors.

Smart 22-T Power Factor Controller With Thyristor Output

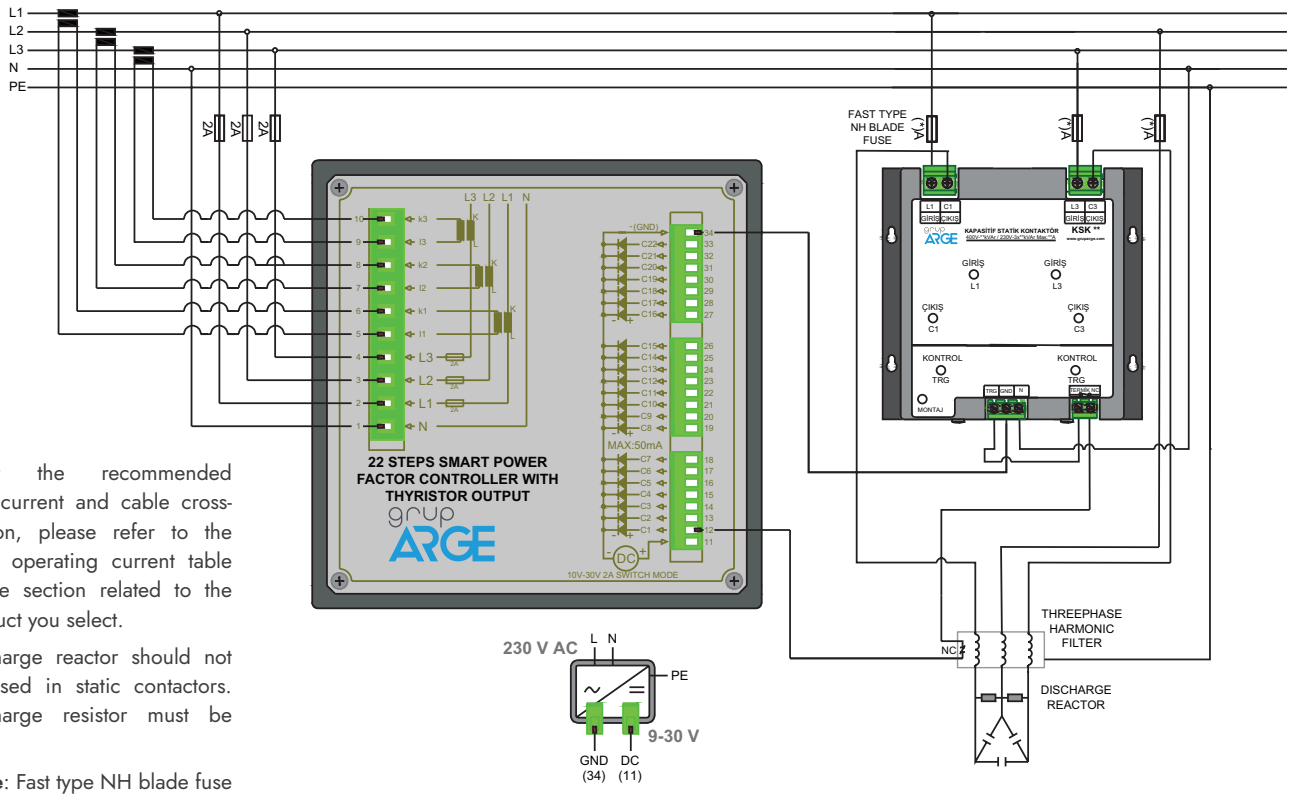

*)For the recommended fuse current and cable cross-section, please refer to the rated operating current table in the section related to the product you select.

Discharge reactor should not be used in static contactors. Discharge resistor must be used.

Note: Fast type NH blade fuse should be preferred for static contactors.

Smart SVC-Enabled MV Current Referenced Compensation System: It is a system in which current measurements are taken by medium voltage; power factor controllers, capacitor and shunt reactor compensators are located on the low voltage side. Smart SVC-Enabled MV Current Referenced Power Factor Controller receives current information from the metering current transformers located on the medium voltage side or through 3 XLPE cable type measuring current transformers to be newly installed, and voltage information from the low voltage side. The power of each phase is measured independently, taking into account the phase angle difference. As a result of this measurement, the power factor controllers produces a solution on the low voltage side of the system by precisely using both the existing steps and the SVC outputs. As a result of the observations to be made from the meter and power factor controllers after the application, a complete solution to the reactive problem can be produced by making precise adjustments for the phases on the power factor controllers. In Solar Power Plants; during the time when electricity is not generated, consumption and power transformers caused by internal needs lead to reactive energy consumption. The low active consumption due to the equipment used results in exceeding the reactive energy limit. The reactive energy generated is compensated by Smart GES power factor controllers and the problem is solved.

Smart SOG1

Technical Features

Product Code	Product Name	Product Description	Step Count	Character LCD	Graphic LCD	SVC	Power Flow Graph	RS-485 Communication	Generator Trigger
GA123	SMART SOG1	18 STEPS SMART SVC MV POWER FACTOR CONTROLLER-X/1	18+SVC		✓	✓	✓	✓	✓
GA124	SMART SOG5	18 STEPS SMART SVC MV POWER FACTOR CONTROLLER-X/5	18+SVC		✓	✓	✓	✓	✓
GA125	SMART OG1	18 STEPS SMART MV POWER FACTOR CONTROLLER-X/1	18		✓		✓	✓	✓
GA126	SMART OG5	18 STEPS SMART MV POWER FACTOR CONTROLLER-X/5	18		✓		✓	✓	✓
GA127	SMART GES1	12 STEPS SMART SVC GES POWER FACTOR CONTROLLER - X/1	12+SVC	✓		✓		✓	
GA128	SMART GES5	12 STEPS SMART SVC GES POWER FACTOR CONTROLLER - X/5	12+SVC	✓		✓		✓	

Smart GES1

• In MV Reference solutions, X/1 power factor controller should be used for current transformer secondary value 1A and X/5 compatible power factor controller should be used for secondary value 5A.

Technical Drawing

Smart OG1 - OG5 - SOG1 - SOG5 Power Factor Controllers

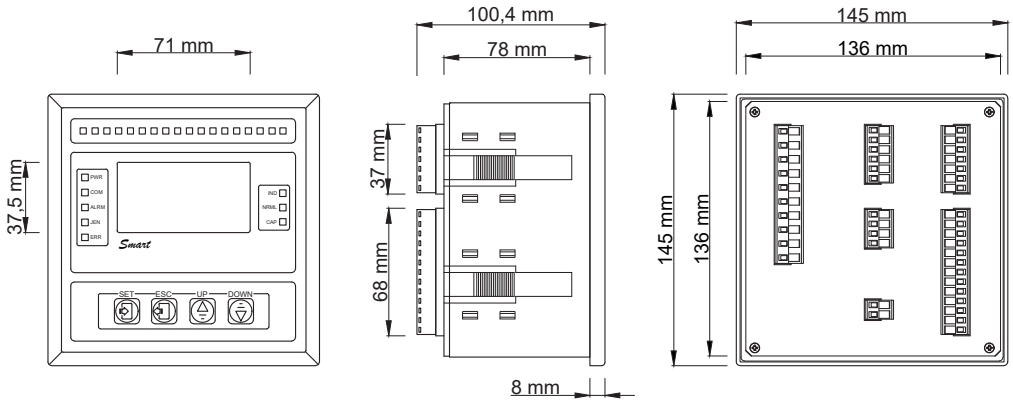

Smart GES1 - GES5 Power Factor Controllers

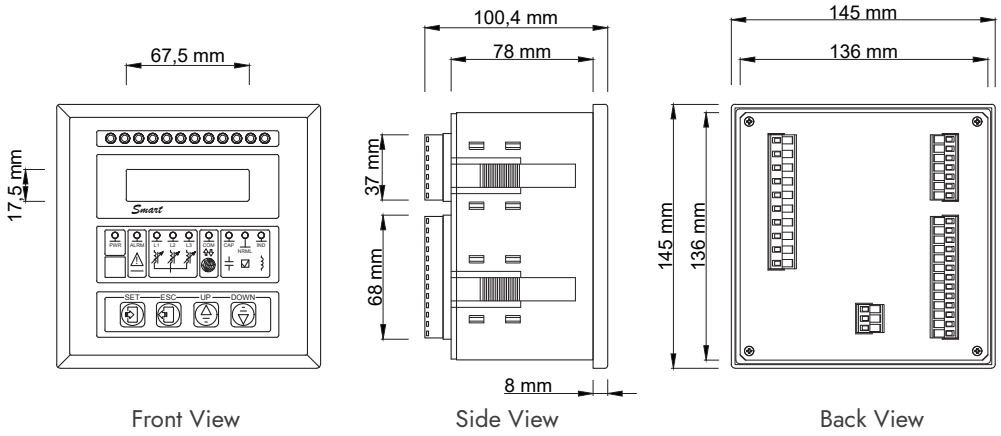

Connection Diagram

Smart OG1 - OG5 - SOG1 - SOG5 Power Factor Controllers

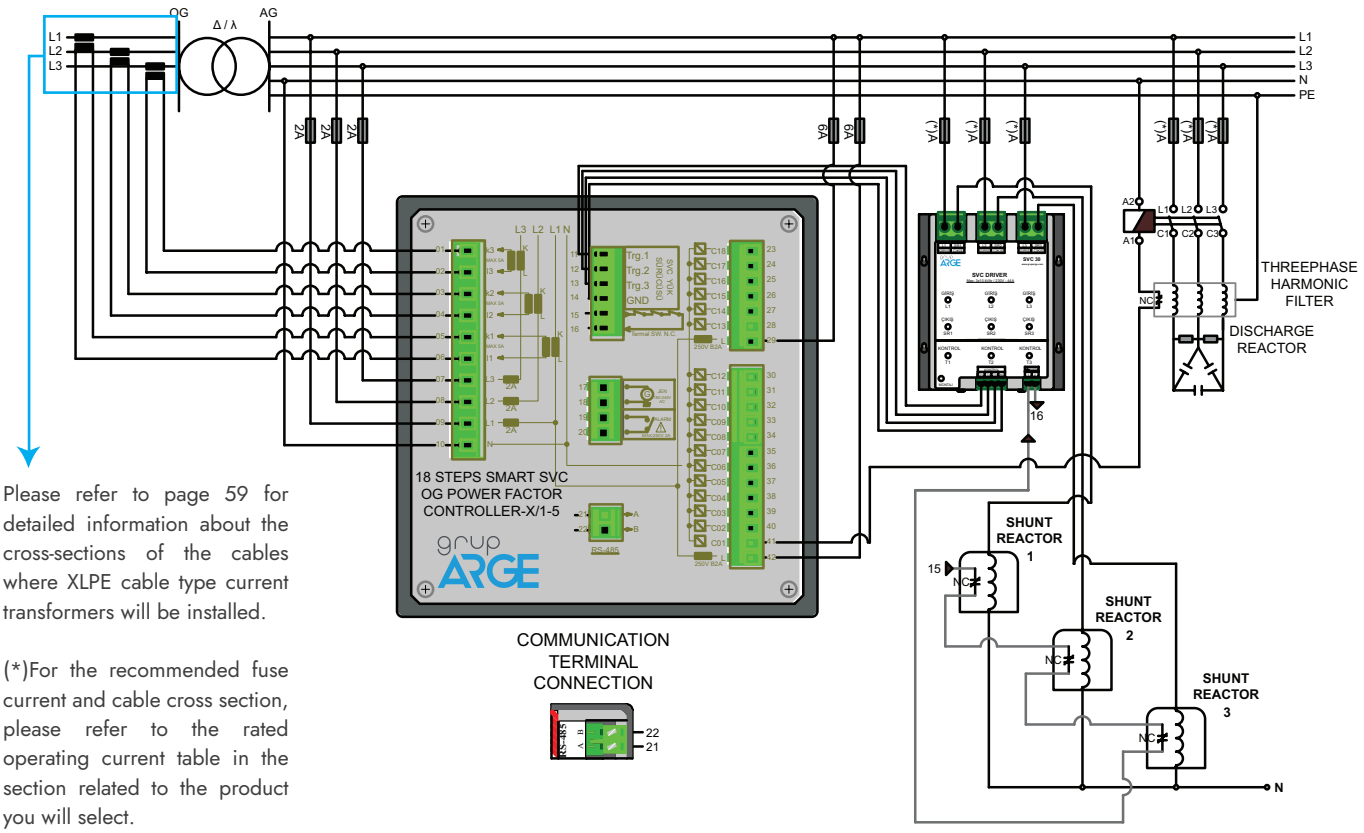

Please refer to page 59 for detailed information about the cross-sections of the cables where XLPE cable type current transformers will be installed.

(*)For the recommended fuse current and cable cross section, please refer to the rated operating current table in the section related to the product you will select.

Smart GES1 - GES5 Power Factor Controllers

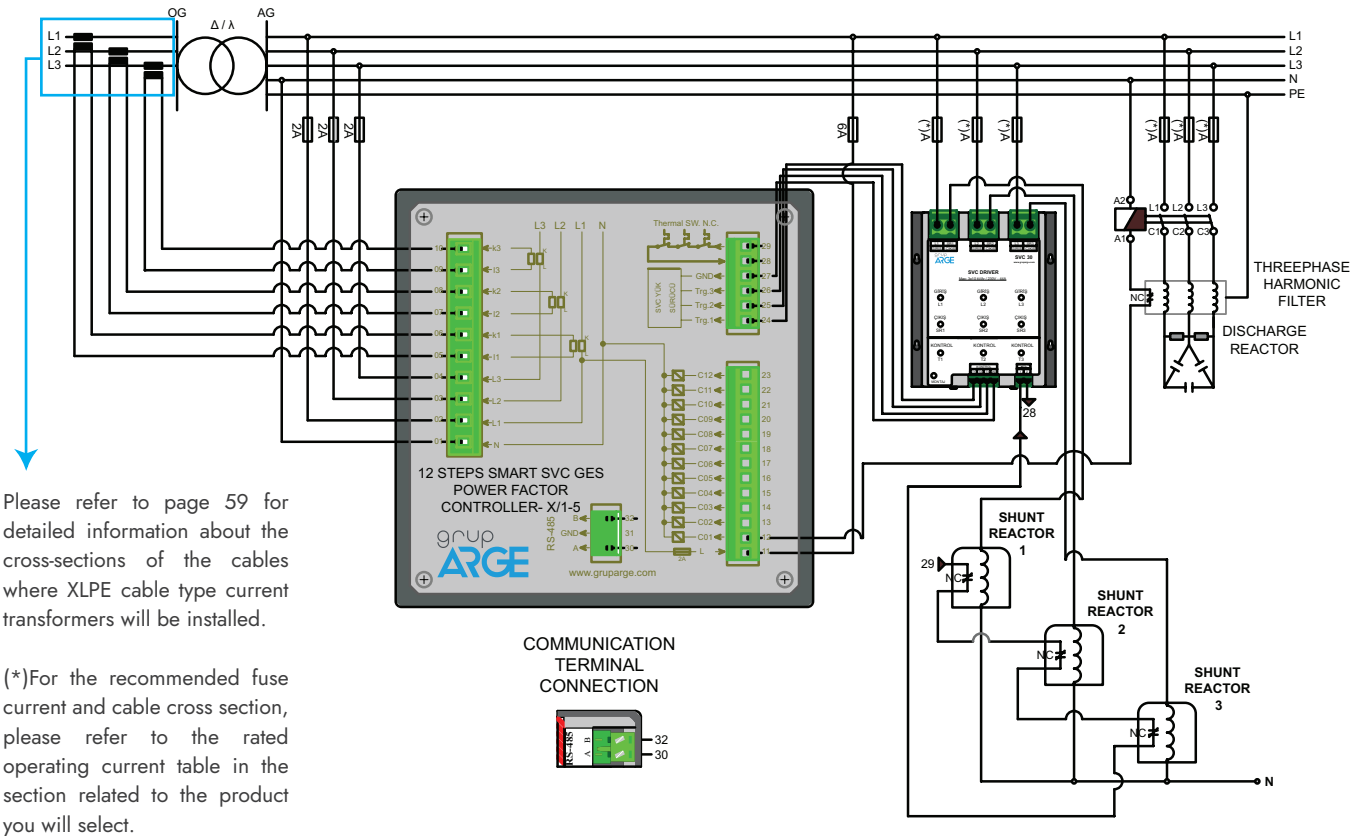

Please refer to page 59 for detailed information about the cross-sections of the cables where XLPE cable type current transformers will be installed.

(*)For the recommended fuse current and cable cross section, please refer to the rated operating current table in the section related to the product you will select.

SWITCHING

Switching

Thanks to the thyristor SVC drives and static contactors developed by Grup Arge, it becomes possible to produce solutions in enterprises where there are fast loads and cannot be impossible to respond contactor systems.

It is not possible to respond to fast variable loads by switching with mechanical contactors in classical systems. Such enterprises can only be answered by switching with a thyristor. In thyristor systems, since the capacitors are activated at zero transitions, the necessity to wait for discharge times is eliminated. In addition, since the current drawn when the capacitors are first switched on is minimum, it is possible to switch them on and off at a high speed. Thus, the life and power quality of capacitors and switching devices are positively affected. In addition, panel maintenance costs are also minimized.

The system can operate in both binary and normal mode depending on the power of the capacitors connected to the steps. If the capacitor arrangement is made in such a way that each step is twice the previous step, the power factor controllers operates in binary mode. The capacitor selection process is much faster in binary mode. If no sequence has been made in this way, or if binary mode has been switched out due to capacitors being devalued over time, the device continues to operate in normal mode. For such very fast systems, it is possible to detect the load change in 10 ms and switch within the next 10 ms. The capacitor is activated at the first zero transition after the switching signal. In this way, the response speed of the system can be reduced to 20 ms.

SVC drivers are switching devices that enable precise compensation even at low powers by activating the single-phase shunt reactors connected to each phase as much as the system needs. In the Smart SVC system, shunt reactors can be adjusted by triggering their power at certain angles through thyristors, each at 1000 steps, for a total of 3000 steps. Smart SVC Drives are designed to drive 3 monophase shunt reactors. In this way, the power of these reactors, each connected to a separate phase, is controlled independently and in a way to provide the desired power.

Key Features

- **Rated Voltage:** 400 V
- **Rated Frequency:** 50 Hz
- **Trigger Voltage:** 12 V DC
- **Maximum Operating Current of the Device (IRms):**
- For SVC 5; 7.2 A. • For SVC 10; 14.4 A.
- For SVC 20; 28.8 A. • For SVC 30; 43.3 A
- **Ambient Temperature:** -10 C / +45 C
- **Protection Class:** IP00
- **Response Time:** 20 ms
- **Humidity: 95%**

SVC 5

SVC 20

SVC 30

Technical Features

Product Code	Product Name	Product Description	Connectable Shunt Reactors	Voltage (V)	Nominal Cable Cross Section (mm2)	Nominal Fuse Current (A)
GA2101	SVC 5	5 kVAr SVC DRIVER	3x(SRM 1.0/SRM 1.5)	230	3(1x2.5) mm²	16
GA2102	SVC 10	10 kVAr SVC DRIVER	3xSRM 3.0	230	3(1x4) mm²	25
GA2103	SVC 20	20 kVAr SVC DRIVER	3x(SRM 5.0/SRM 7.5)	230	3(1x10) mm²	50
GA2104	SVC 30	30 kVAr SVC DRIVER	3xSRM 10.0	230	3(1x16) mm²	80

- For larger powers, solutions can be produced by connecting up to 3 drives in parallel.
- NC (Normally closed) thermal control is available for 20 and 30 kVAr models.
- Inductive Static Contactors must be used for quick commissioning of three-phase shunt reactors.

Technical Drawing

5 kVAr SVC DRIVER

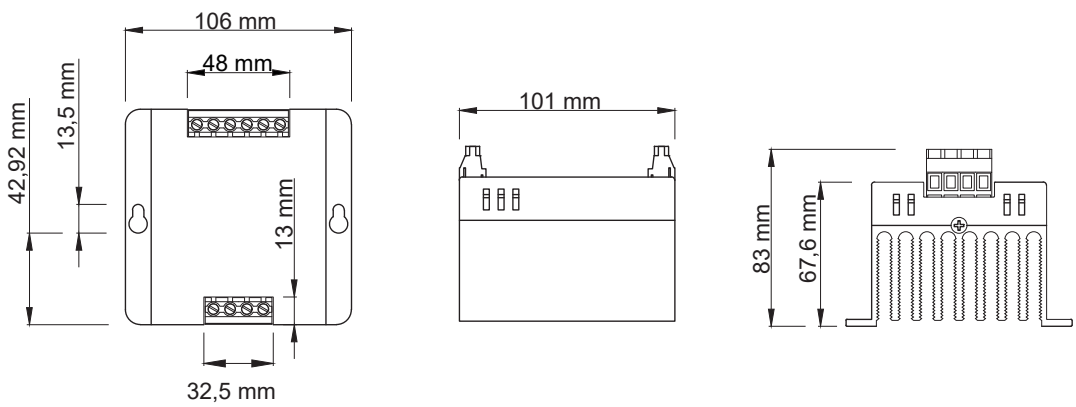

Front View Side View Top View

Technical Drawing

10 kVAr SVC DRIVER

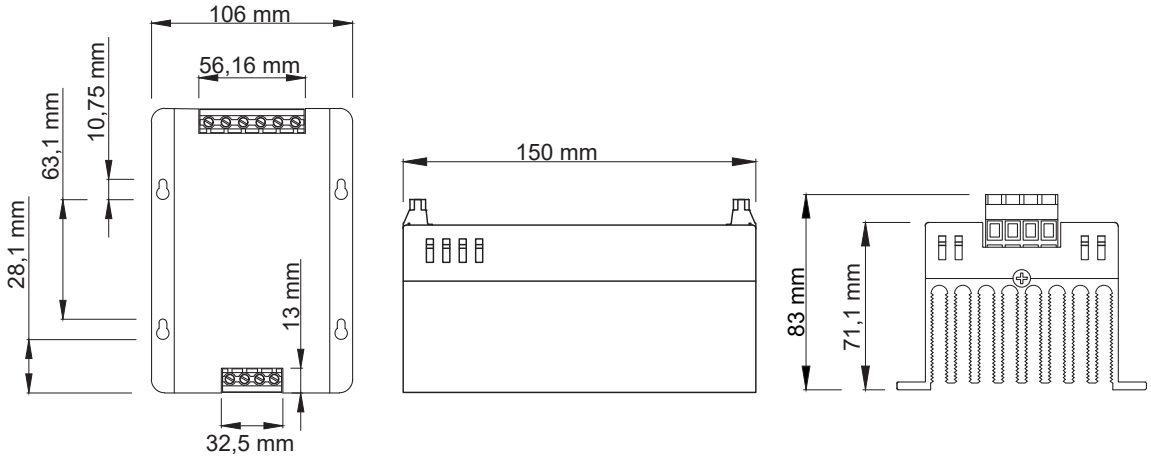

Front View Side View Top View

20 kVAr SVC DRIVER

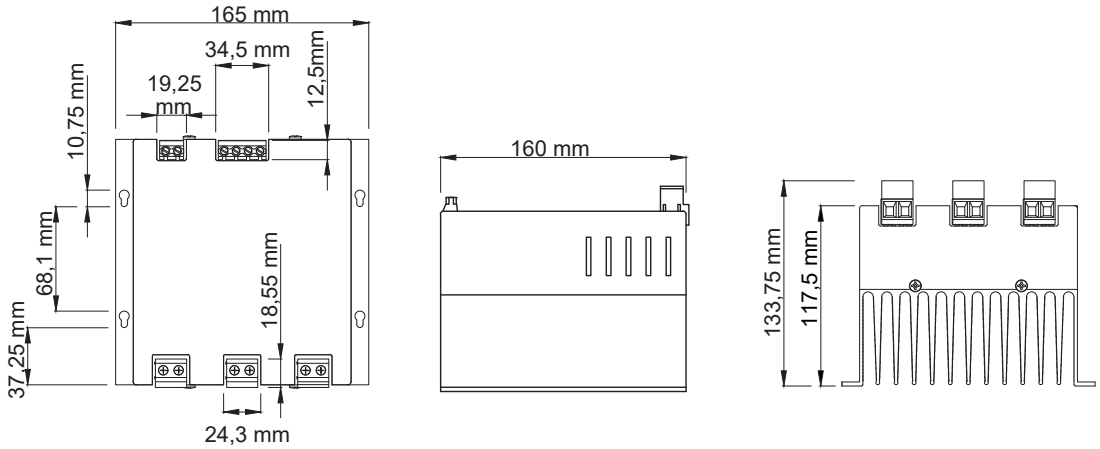

Front View Side View Top View

30 kVAr SVC DRIVER

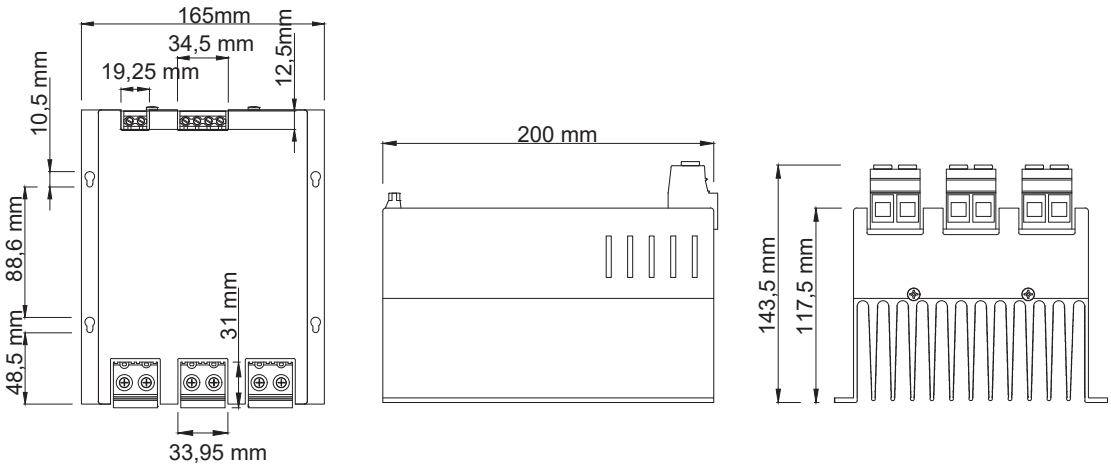

Front View Side View Top View

Connection Diagram

SVC (5 - 10 kVAr) Driver

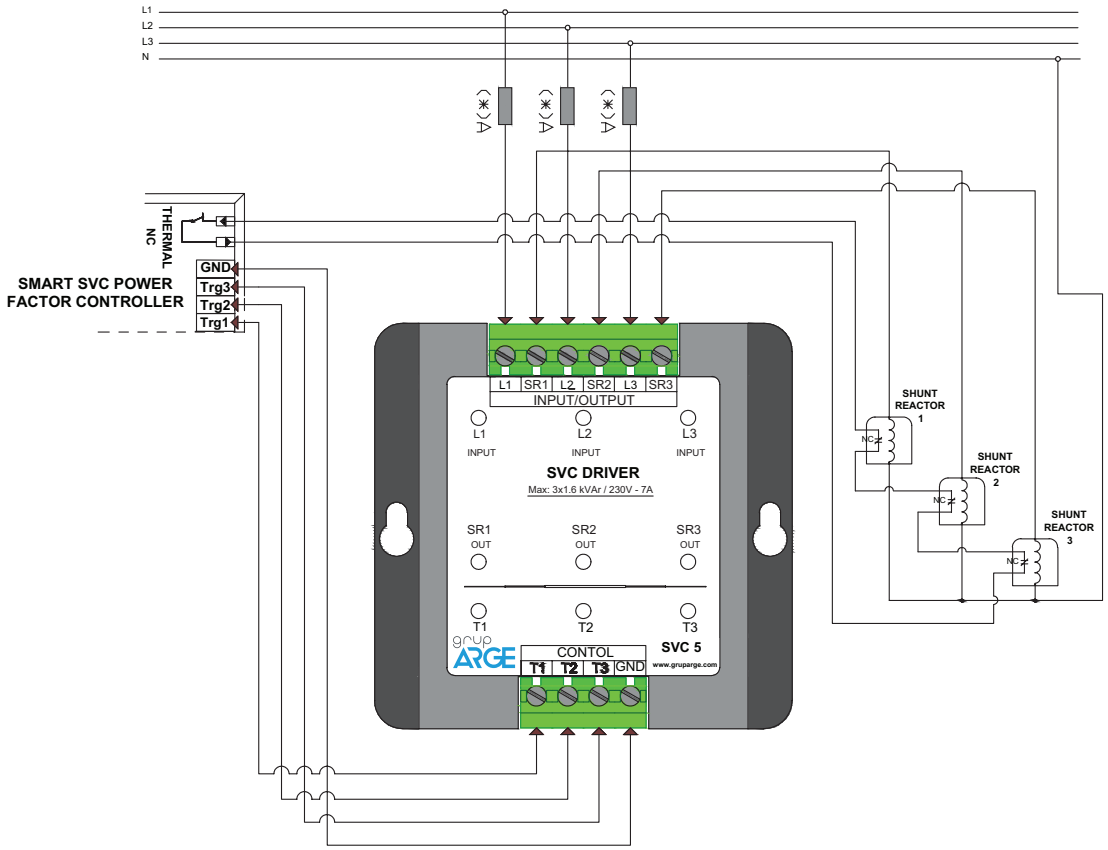

SVC (20 - 30 kVAr) Driver

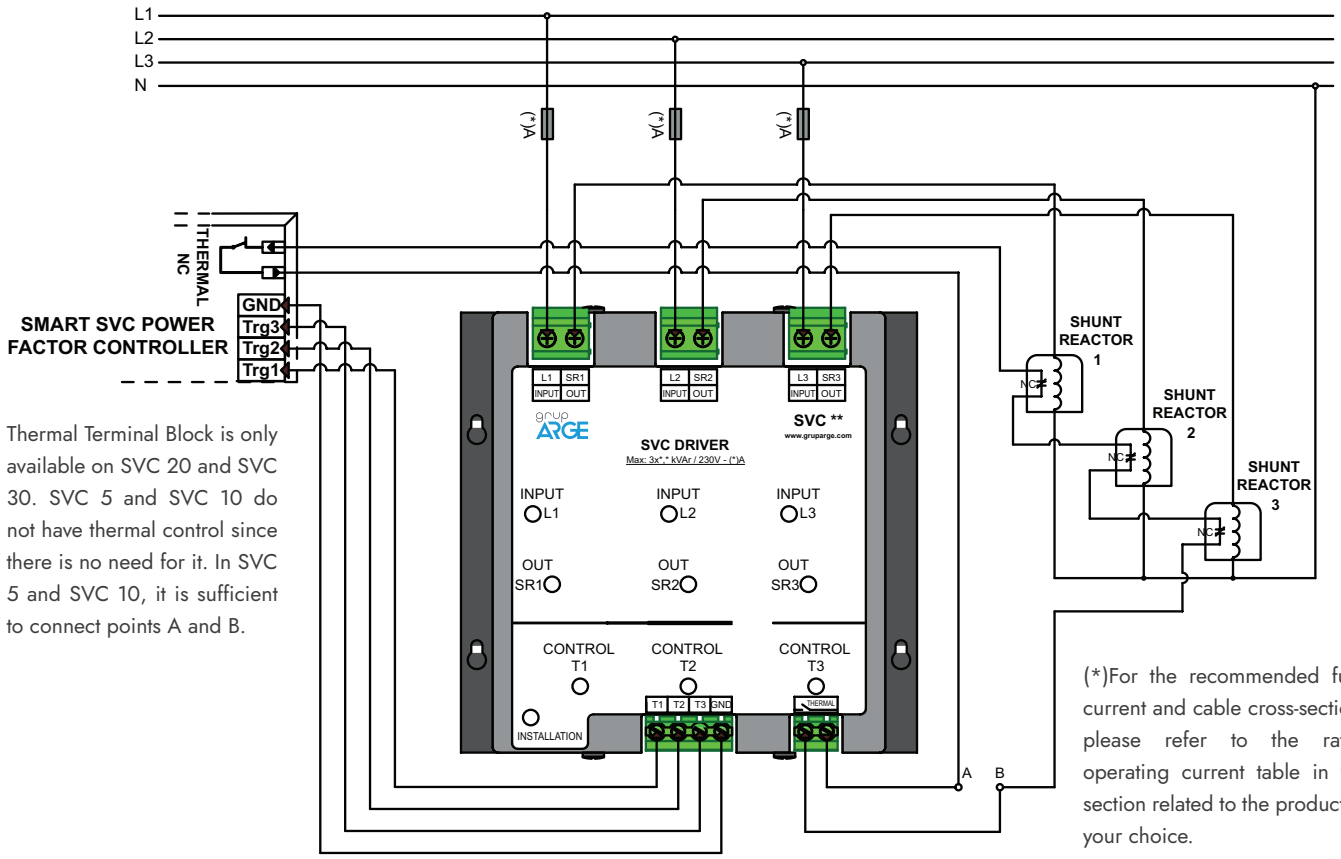

Thermal Terminal Block is only available on SVC 20 and SVC 30. SVC 5 and SVC 10 do not have thermal control since there is no need for it. In SVC 5 and SVC 10, it is sufficient to connect points A and B.

(*)For the recommended fuse current and cable cross-section, please refer to the rated operating current table in the section related to the product of your choice.

It is used for switching capacitors in compensation systems. Static contactors prevent high switching currents by switching when capacitor voltage and bus voltage are equalized. Furthermore, it provides to meet the reactive needs of fast loads by switching very fast without waiting for the capacitor discharge time.

In enterprises where reactive changes are fast, contactor systems are insufficient to respond to the need for compensation. In the compensation of such enterprises, it is possible to respond to rapidly changing loads by switching with thyristors instead of switching with mechanical contactors in classical systems.

In thyristor systems, since the capacitors are activated at zero crossings, the necessity to wait for discharge times is eliminated. In addition, since the current drawn when the capacitors are first switched on is minimal, it is possible to switch on and off at a high speed.

Key Features

- **Nominal Voltage:** 400 V
- **Nominal Frequency:** 50 Hz
- **Maximum Operating Voltage:** 690 V
- **Control Voltage:** 9 - 30 V DC
- **Ambient Temperature:** -10 C° / +55 C°
- **Protection Class:** IP00
- **Response Time:** 20 ms
- **Humidity:** 95%

KSK 10T3

KSK 20T3

KSK 50T2

KSK 80T2

Technical Features

Product Code	Product Name	Product Description	Voltage (V)	Nominal Cable Cross Section (mm2)	Nominal Fuse Current (A)
GA2201	KSK 10T3*	10 kVAr CAP. STATIC CON. 3 TRIS.	230/400	3(1x4) mm2	25
GA2202	KSK 15T2	15 kVAr CAP. STATIC CON.	400	3(1x6) mm2	40
GA2203	KSK 15T2D	15 kVAr CAP. STATIC CON. DISCHARGE RESISTANT	400	3(1x6) mm2	40
GA2204	KSK 20T3*	20 kVAr CAP. STATIC CON. 3 TRIS.	230/400	3(1x10) mm2	50
GA2205	KSK 25T2	25 kVAr CAP. STATIC CON.	400	3(1x10) mm2	63
GA2206	KSK 25T2D	25 kVAr CAP. STATIC CON. DISCHARGE RESISTANT	400	3(1x10) mm2	63
GA2207	KSK 50T2	50 kVAr CAP. STATIC CON.	400	3(1x35) mm2	125
GA2208	KSK 50T2D	50 kVAr CAP. STATIC CON. DISCHARGE RESISTANT	400	3(1x35) mm2	125
GA2210	KSK 80T2D	80 kVAr CAP. STATIC CON. DISCHARGE RESISTANT	400	3(1x50) mm2	200
GA2212	KSK 100T2D	100 kVAr CAP. STATIC CON. DISCHARGE RESISTANT	400	3(1x70) mm2	250

*** For three-phase capacitors, a static contactor with 2 thyristors, a static contactor with 3 thyristors must be preferred for single-phase capacitors.**

- 50, 80 and 100 kVAr capacitive static contactors are fan cooled.
- All static contactors have NC (Normally closed) thermal control.
- Capacitive static contactors must be used in conjunction with a harmonic filter or current limiting reactor.
- In panels where capacitive static contactors are used, LV surge arrester must be used.

In what situations and why should the discharge resistor be used?

It is recommended to use it in all applications with harmonic filters. In order for the capacitor to be put back into operation in a short time after disconnection, the discharge resistor must be used. The discharge resistance can also be applied externally.

What is the advantage of products with an internal discharge resistor?

In externally applied discharge resistor solutions, the discharge resistors are constantly under voltage while the capacitors are in operation. In this case, the resistors increase active losses and board temperature. Discharge resistors integrated in the IGBT and the drivers can discharge the capacitor in less than 150 ms after the capacitor is removed from the circuit. Discharge the capacitor and leave the circuit. When the capacitor is in the circuit, the resistors are not connected to the line.

Technical Drawing

Capacitive Static Contactors KSK 10

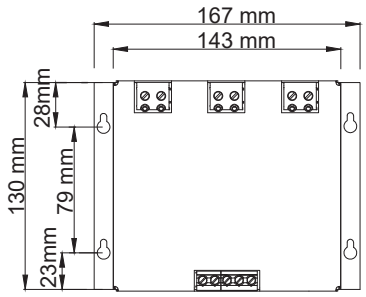

Front View

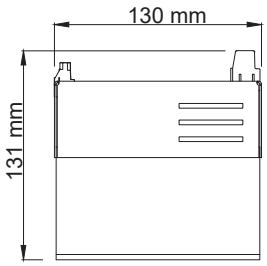

Side View

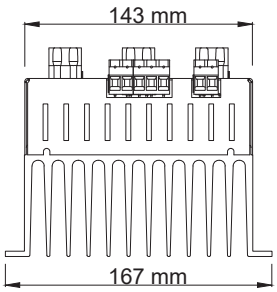

Top View

Capacitive Static Contactors KSK 20

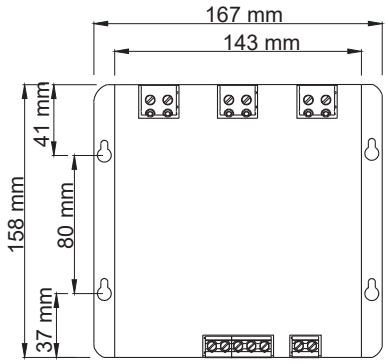

Front View

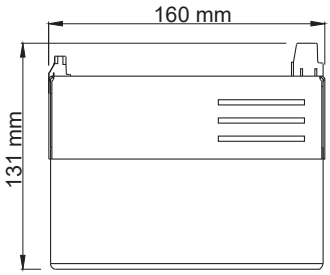

Side View

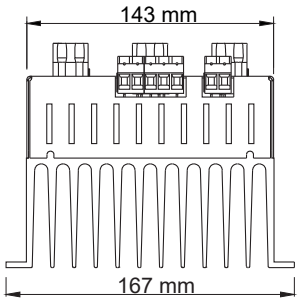

Top View

Capacitive Static Contactors KSK 15 - 25

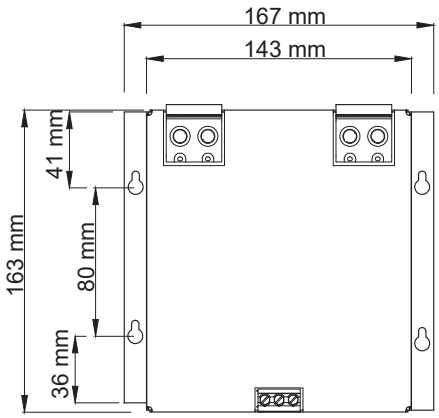

Front View

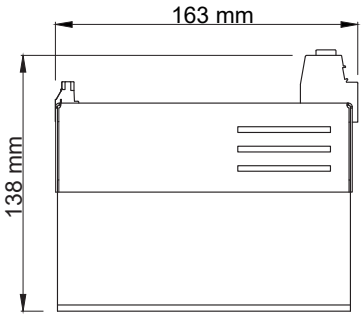

Side View

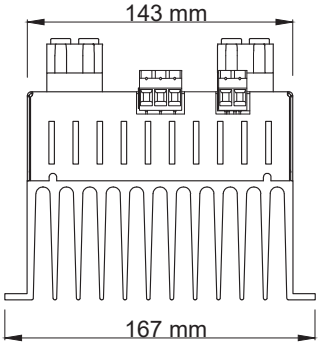

Top View

Technical Drawing

Capacitive Static Contactors KSK 50

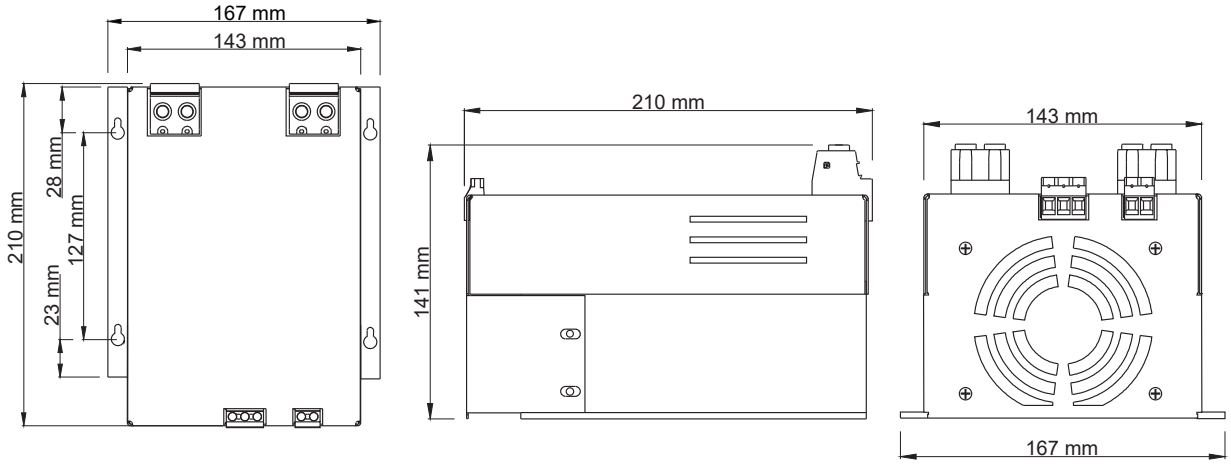

Front View Side View Top View

Capacitive Static Contactors KSK 80

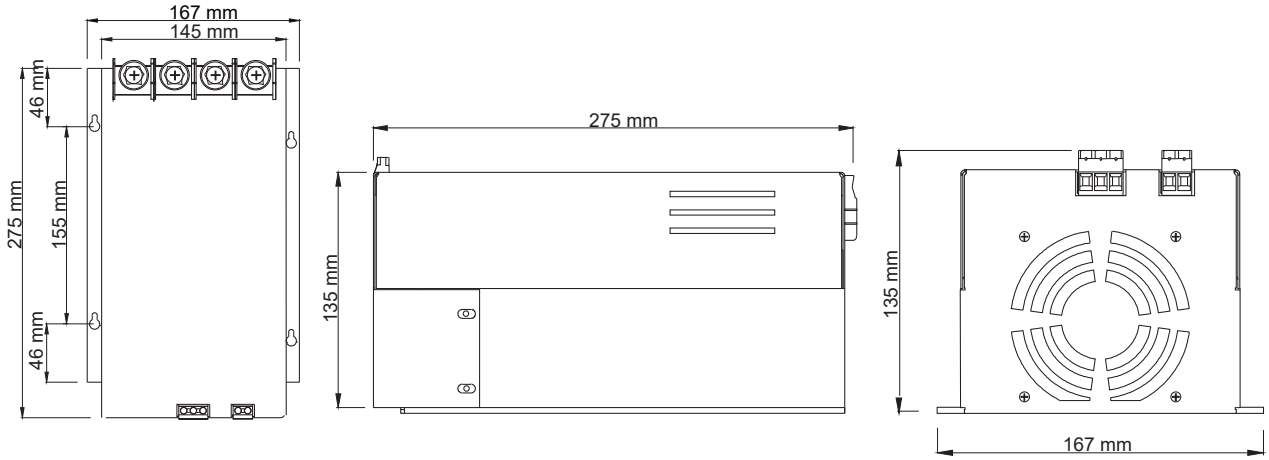

Front View Side View Top View

Capacitive Static Contactors KSK 100

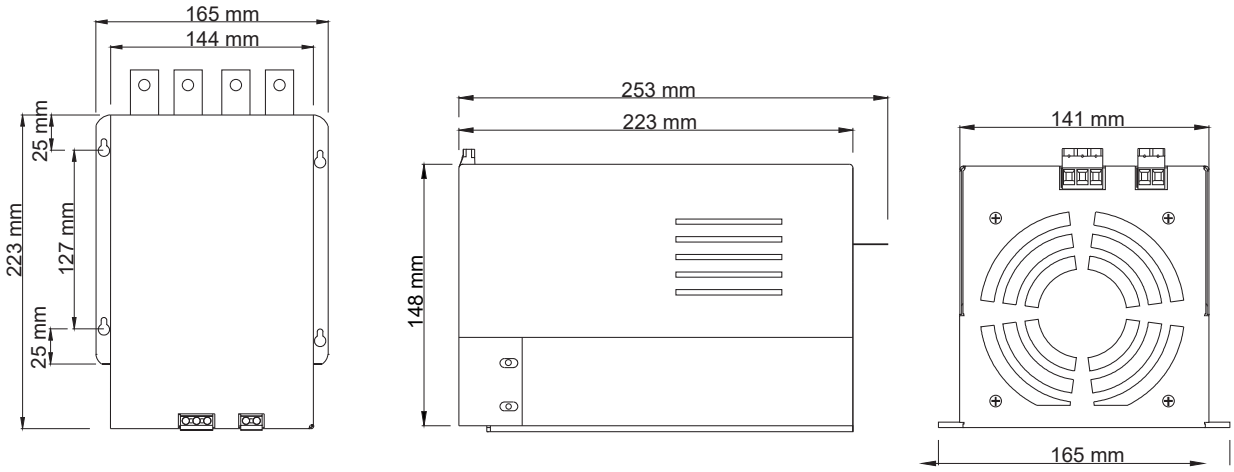

Front View Side View Top View

Connection Diagram

Capacitive Static Contactor T2 Connection

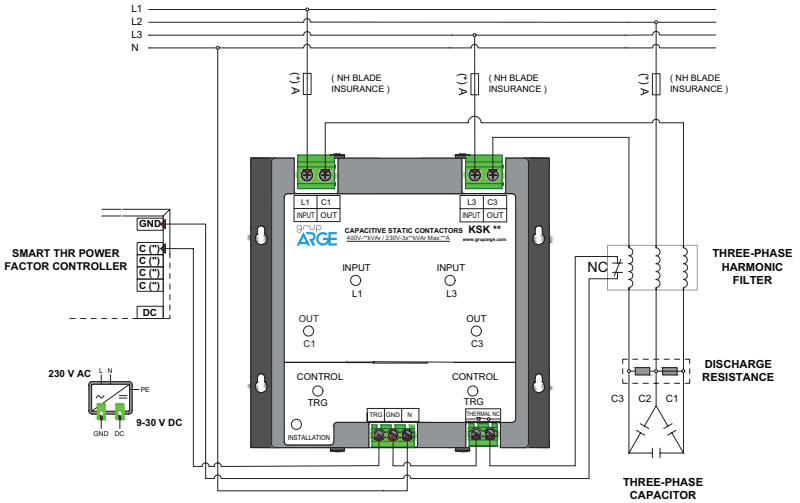

NOTE:
For static contactors with internal discharge resistor, there is no need to use an external discharge resistor.

Capacitive Static Contactor T3 Connection

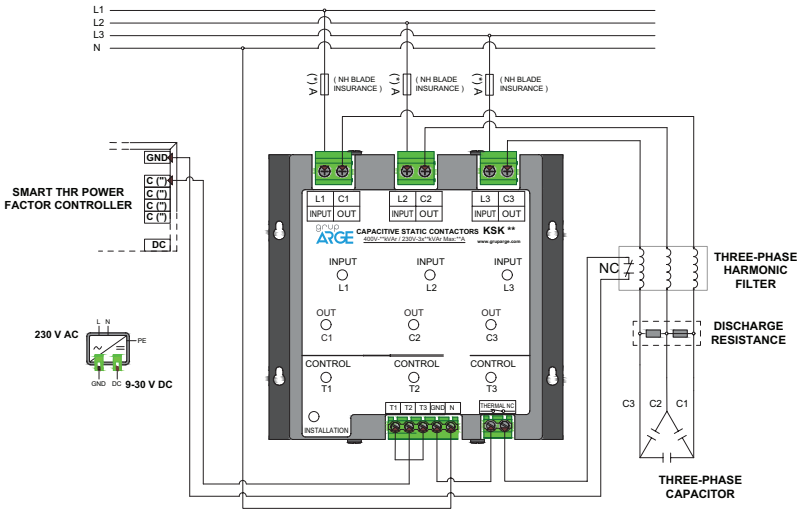

Capacitive Static Contactor Monophase T3 Connection

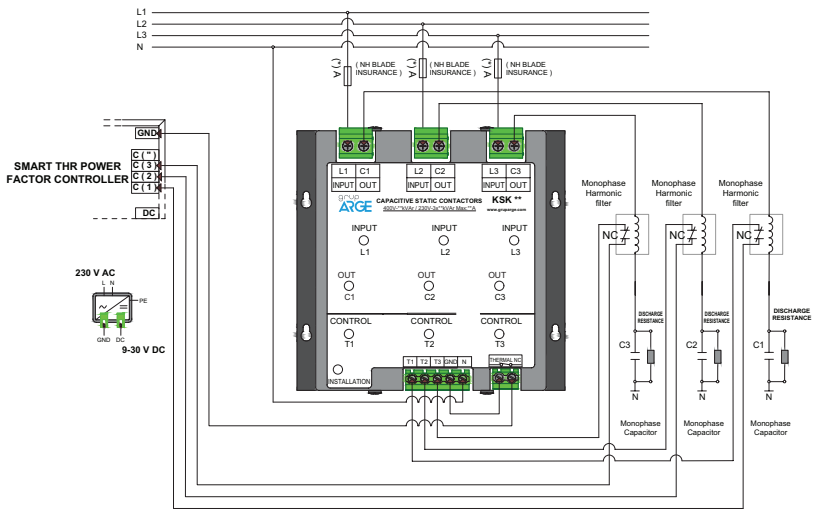

Inductive Static Contactors are designed to be used for switching three-phase shunt reactors connected to steps. They have advantages over contactors such as silent operation, long life and low failure rates.

ESK 20T3

ESK 50T3

Technical Features

Product Code	Product Name	Product Description	Voltage (V)	Nominal Cable Cross Section (mm2)	Nominal Fuse Current (A)
GA2221	ESK 10T3	10 kVAr END. STATIC CON.	230/400	3(1x4) mm²	25
GA2222	ESK 20T3	20 kVAr END. STATIC CON.	230/400	3(1x10) mm²	50
GA2223	ESK 30T3	30 kVAr END. STATIC CON.	230/400	3(1x16) mm²	80
GA2224	ESK 50T3	50 kVAr END. STATIC CON.	230/400	3(1x35) mm²	125

Technical Drawing

Inductive Static Contactors ESK 10

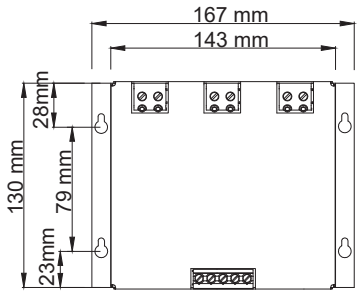

Front View

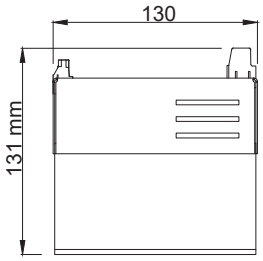

Side View

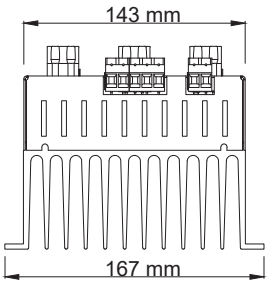

Top View

Inductive Static Contactors ESK 20

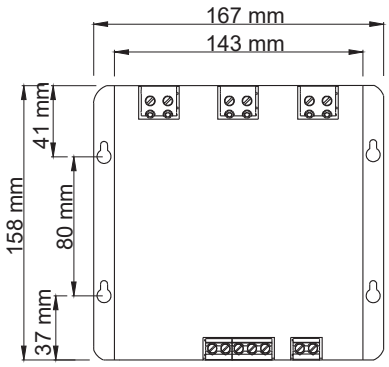

Front View

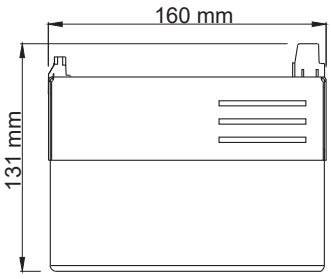

Side View

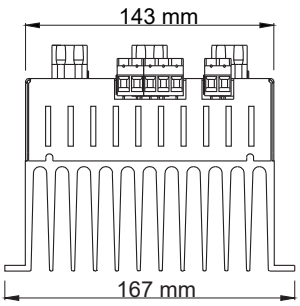

Top View

Technical Drawing

Inductive Static Contactors ESK 30

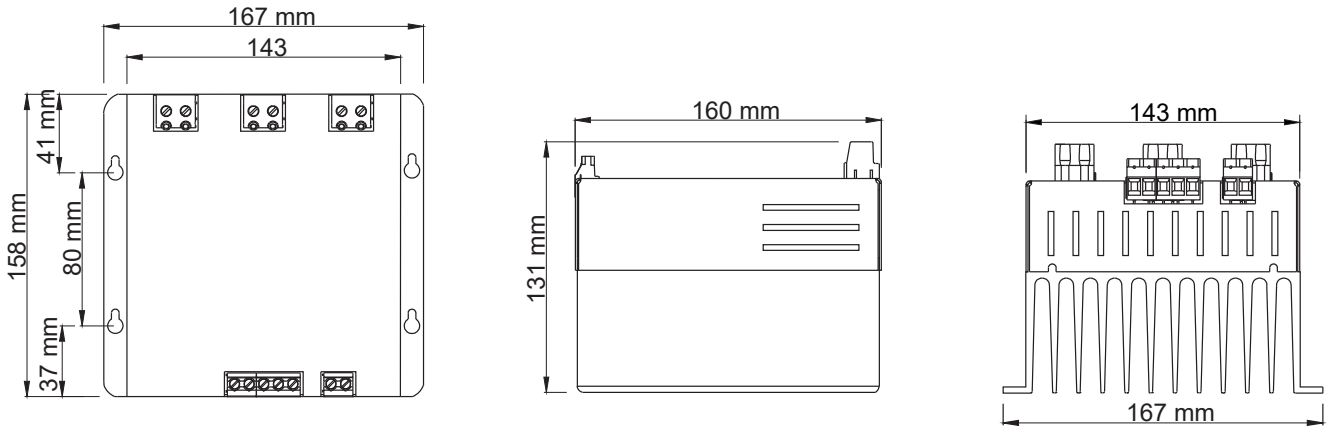

Front View Side View Top View

Inductive Static Contactors ESK 50

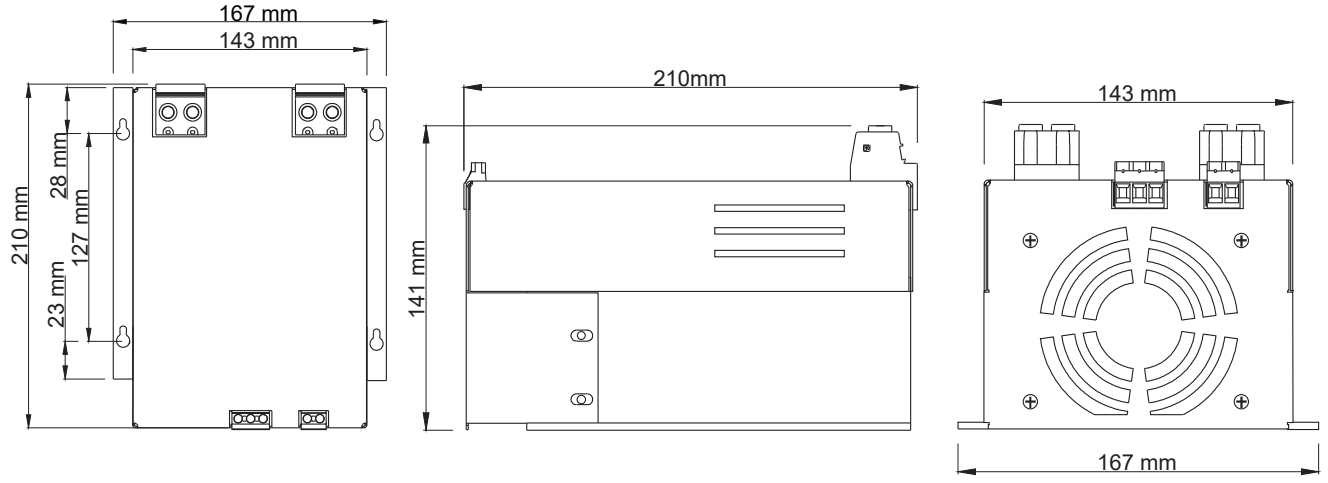

Front View Side View Top View

Connection Diagram

Inductive Static Contactors ESK (10) - Monophase Shunt Reactor

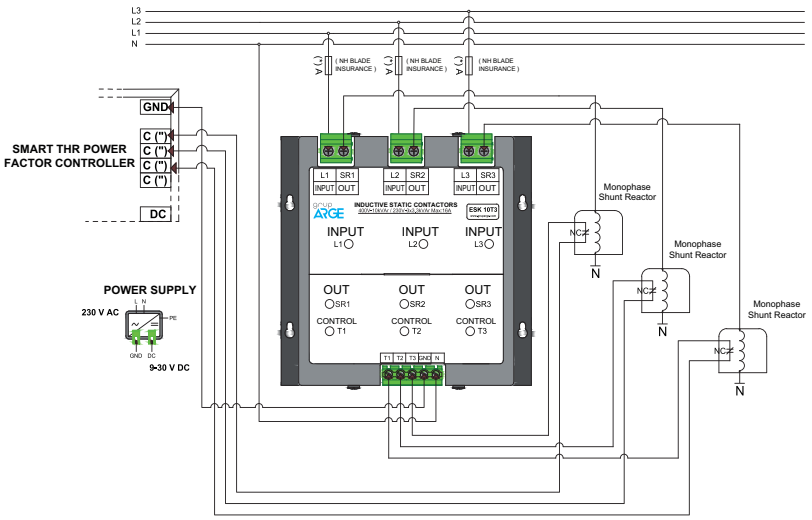

Connection Diagram

ESK (10) - Three-Phase Shunt Reactor

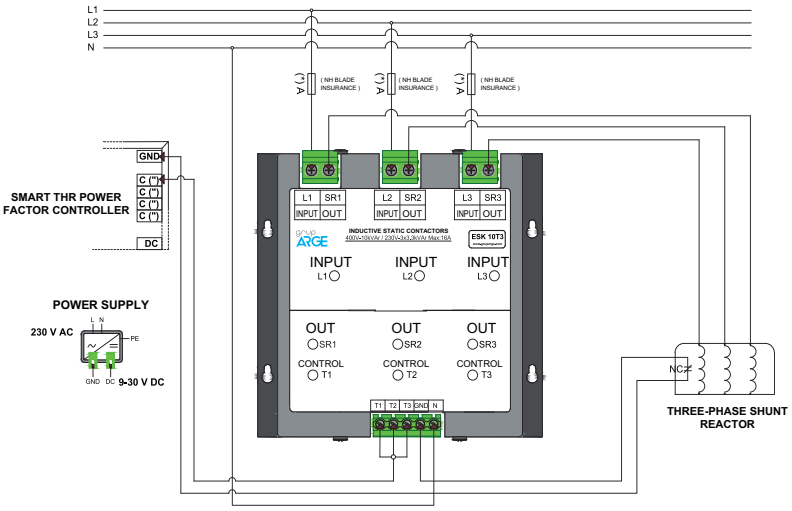

ESK (20-30-50) - Monophase Shunt Reactor

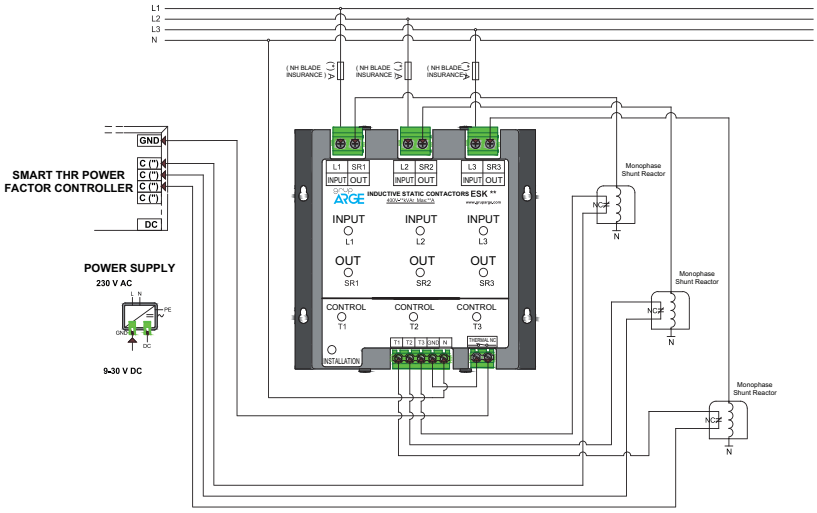

ESK (20-30-50) - Three-Phase Shunt Reactor

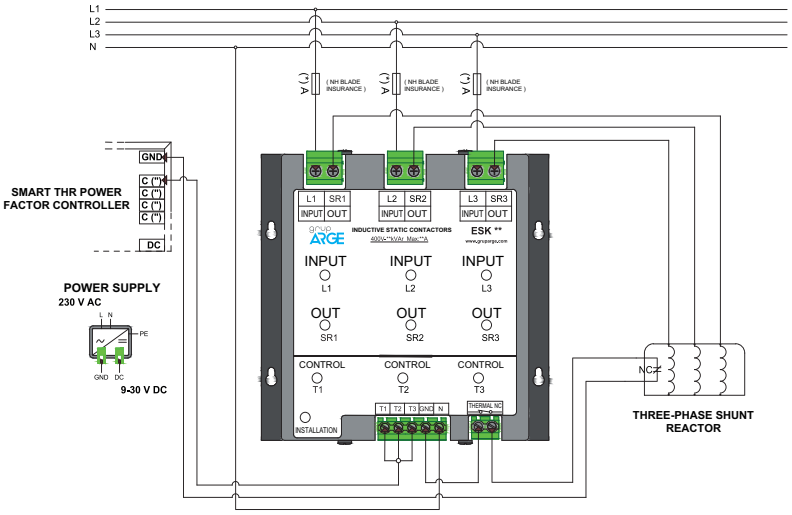

They are electromagnetic switches that turn on the closed contacts and turn off the open contacts when electricity is supplied to the coil and can be controlled remotely. As it is known, capacitors cause very short-term high currents that can reach up to 150 times the rated current between 1 and 15 kHz at the moment of initial activation. In order to limit these currents, a pre-resistor can be added to all three phases to which the capacitor is connected. Under normal conditions, this process is difficult, therefore only a compensation contactor designed for this purpose is used.

KNT K50.0

Technical Features

Product Code	Product Name	Product Description	Power kVAr 230 (V)	Power kVAr 400 (V)	Ui (V)	Ith (A)	Current (A) (Ac-6b) (for 400 V)	Auxiliary Contact NO	Auxiliary Contact NC	Weight
GA2301	KNT K2.5	2.5 kVAr COMPENSATION CONTACTOR	1,4	2,5	690	25,0	3,6	1	1	0,44
GA2302	KNT K5.0	5.0 kVAr COMPENSATION CONTACTOR	2,8	5,0	690	25,0	7,2	1	1	0,44
GA2303	KNT K7.5	7.5 kVAr COMPENSATION CONTACTOR	4,0	7,5	690	25,0	11,0	1	1	0,44
GA2304	KNT K10.0	10 kVAr COMPENSATION CONTACTOR	5,0	10,0	690	25,0	14,0	1	1	0,44
GA2305	KNT K12.5	12.5 kVAr COMPENSATION CONTACTOR	6,7	12,5	690	32,0	18,0	1	1	0,63
GA2306	KNT K15.0	15.0 kVAr COMPENSATION CONTACTOR	8,5	15,0	690	32,0	22,0	1	1	0,63
GA2307	KNT K20.0	20.0 kVAr COMPENSATION CONTACTOR	11,0	20,0	690	43,0	29,0	1	1	0,64
GA2308	KNT K25.0	25.0 kVAr COMPENSATION CONTACTOR	14,0	25,0	690	63,0	36,0	1	2	1,4
GA2309	KNT K30.0	30.0 kVAr COMPENSATION CONTACTOR	20,0	30,0	690	63,0	44,0	1	2	1,4
GA2310	KNT K40.0	40.0 kVAr COMPENSATION CONTACTOR	25,0	40,0	690	95,0	58,0	1	2	1,5
GA2311	KNT K50.0	50.0 kVAr COMPENSATION CONTACTOR	29,0	50,0	690	95,0	72,0	1	2	1,5
GA2312	KNT K60.0	60.0 kVAr COMPENSATION CONTACTOR	32,0	60,0	690	200,0	87,0	1	0	3,45
GA2313	KNT K70.0	70.0 kVAr COMPENSATION CONTACTOR	35,0	70,0	690	275,0	101,0	1	0	3,45
GA2314	KNT K75.0	75.0 kVAr COMPENSATION CONTACTOR	38,0	75,0	690	275,0	108,0	1	0	3,45

Technical Drawing

KNT K2.5, KNT K5.0, KNT K7.5, KNT K10.0, KNT K12.5, KNT K15.0, KNT K20.0

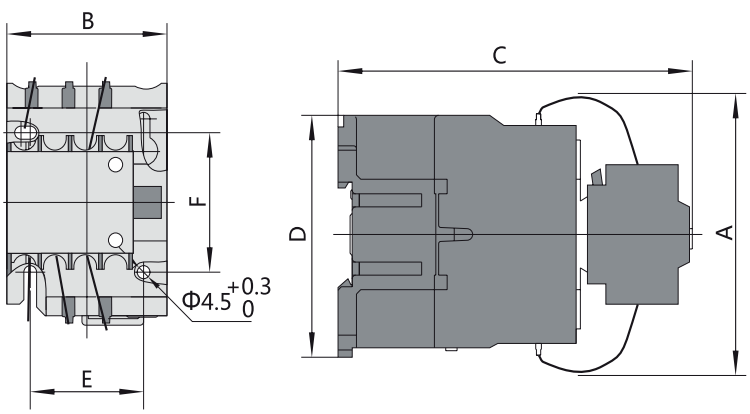

Contactor Type	Amax	Bmax	Cmax	Dmax	Emax	Fmax
KNT K2.5, KNT K5.0, KNT K7.5, KNT K10.0	80	47	124	76	34/35	50/60
KNT K12.5, KNT K15.0	90	58	132	86	40	48
KNT K20.0	90	58	136	86	40	48

Technical Drawing

KNT K25.0, KNT K30.0, KNT K40.0, KNT K50.0

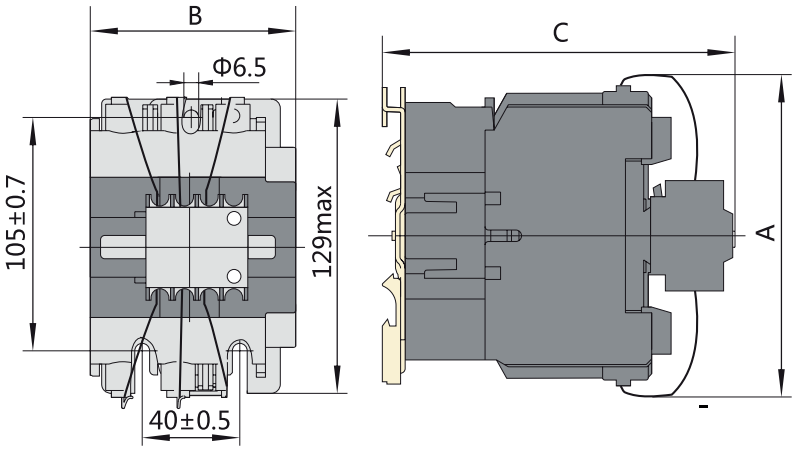

Contactor Type	Amax	Bmax	Cmax	Dmax	Emax	Fmax
KNT K25.0, KNT K30.0	132	79	150	-	-	-
KNT K40.0, KNT K50.0	135	87	158	-	-	-

KNT K60.0, KNT K70.0, KNT K75.0

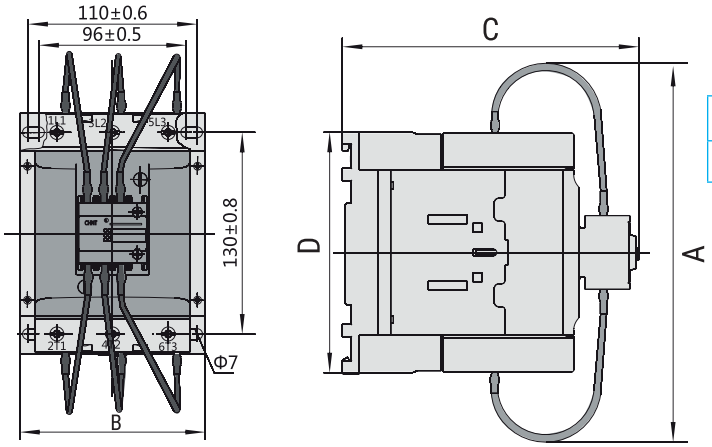

Contactor Type	Amax	Bmax	Cmax	Dmax	Emax	Fmax
KNT K60.0, KNT K70.0, KNT K75.0	200	120	192	155	-	-

Connection Diagram

Compensation Contactor

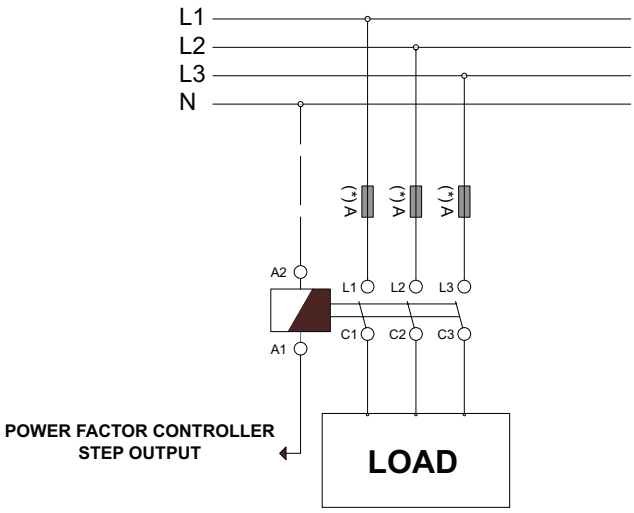

(*)For the recommended fuse current and cable cross-section, please refer to the rated operating current table in the section related to the product of your choice.

SHUNT AND HARMONIC

Shunt Reactors

MV cables, UPSs and lighting elements with electronic ballasts are characterized as capacitive. Shunt reactors are needed to meet the reactive power requirement and to keep the reactive ratios within the desired limits in enterprises with such loads. The load profile of the enterprises shows changes day by day. In the past, it was sufficient to compensate only by connecting capacitors. But today, the number of devices with capacitive characteristics is constantly increasing. Therefore, it is necessary to use shunt reactors together with capacitors for a correct compensation. According to the size and load profile of the enterprises, the size of the shunt reactor to be used varies. After analyzing the enterprise correctly, the most suitable shunt reactor should be selected considering the cost.

Key Features

- **Standard:** EN 60076-6 and EN 61558-2-20
- **Nominal Voltage:** 230 - 400 V AC
- **Nominal Power:** 0.5 - 50 kVAr
- **Nominal Frequency:** 50 Hz
- **Reactor Factor:** 100%
- **Inductivity Tolerance:** 5%
- **Insulation (Winding - Core):** 3 kV
- **Insulation Class: Class F 155** C˚
- **Humidity:** 95%
- **Cooling:** Natural T40
- **Connection:** Terminal block, lug or busbar.
- **Core:** Low loss, siliceous sheet, air gap.
- **Winding Material:** Aluminum or copper.
- **Thermal Protection:** 120 C (NC contact).
- **Protection Class:** IP40

Harmonic Filters

Under normal conditions, it is required that the mains voltage is in sinusoidal form. However, for various reasons, the mains voltage moves away from the sinusoidal form and high-frequency components called harmonics are formed. When harmonics exceed certain limits, it can cause very dangerous consequences for businesses. For this reason, harmonic filter reactors should be used in compensation panels in enterprises with high harmonics. In this way, both resonance events that are dangerous for the system are prevented and capacitors are protected from the harmful effects of harmonics.

Key Features

- **Standard:** EN60076-6 ve EN61558-2-20
- **Nominal Voltage:** 230 - 690 V AC
- **Nominal Power:** 0.5 - 100 kVAr
- **Nominal Frequency:** 50 Hz
- **Inductivity Tolerance:** %5
- **Insulation Class:** Class F 155 C˚
- **Humidity in the working environment:** < %95
- **Cooling:** Natural T40
- **Connection:** Terminal, lug or busbar.
- **Core:** Consists of high permeability iron core withair gap.
- **Winding material:** Aluminum or copper.
- **Thermal protection:** 120%C (NC contact). Thermally protected against overheating in the center leg.
- **Protection class:** IP00

Technical Features

SVC Shunt Reactor (230 V)

Product Code	Product Name	Product Description	Power (kVAr)	A (Irms)	L (mH)	Connection	Thermal Protection	Nominal Cable Cross Section (mm2)	Weight (kg)
GA5001	SVC-R 1.0	1.0 kVAr SVC SHUNT REACTOR	1,0	4,34	168,38	Terminal	✓	(1x2.5) mm²	5
GA5002	SVC-R 1.5	1.5 kVAr SVC SHUNT REACTOR	1,5	6,52	112,25	Terminal	✓	(1x2.5) mm²	8
GA5003	SVC-R 3.0	3.0 kVAr SVC SHUNT REACTOR	3,0	13,04	56,12	Terminal	✓	(1x4) mm²	14,5

SVC-R 1.5

• SVC shunt reactors are recommended to be used only with SVC Drives.

Monophase Shunt Reactor (230 V)

Product Code	Product Name	Product Description	Power (kVAr)	A (Irms)	L (mH)	Connection	Thermal Protection	Nominal Cable Cross Section (mm2)	Weight (kg)
GA5101	SRM 1.0	1.0 kVAr MONOPHASE SHUNT REACTOR	1,0	4,34	168,38	Terminal	✓	(1x2.5) mm²	6,5
GA5102	SRM 1.5	1.5 kVAr MONOPHASE SHUNT REACTOR	1,5	6,52	112,25	Terminal	✓	(1x2.5) mm²	9,5
GA5103	SRM 3.0	3.0 kVAr MONOPHASE SHUNT REACTOR	3,0	13,04	56,12	Terminal	✓	(1x4) mm²	17,5
GA5104	SRM 5.0	5.0 kVAr MONOPHASE SHUNT REACTOR	5,0	21,7	33,7	Lug	✓	(1x4) mm²	20,0
GA5105	SRM 7.5	7.5 kVAr MONOPHASE SHUNT REACTOR	7,5	32,6	22,45	Lug	✓	(1x10) mm²	27,0
GA5106	SRM 10.0	10.0 kVAr MONOPHASE SHUNT REACTOR	10,0	43,4	16,83	Busbar	✓	(1x16) mm²	34,0

SRM 10.0

• Monophase Shunt Reactors can be used with SVC Drives, Inductive Static Contactors and Compensation Contactors.

Technical Drawing

SVC - Monophase Shunt Reactor

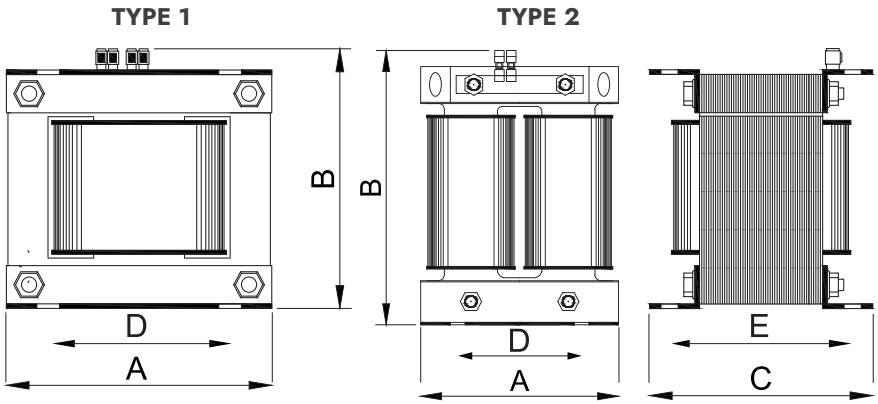

Type 2 applies to SRM 7.5 and SRM 10.0.

• Product sizes indicated in the table may vary. You can contact for detailed information.

SVC Shunt Reactors (230 V)

Product Name	A (mm)	B (mm)	C (mm)	D (mm)	E (mm)
SVC-R 1.0	120	100	102	95	75
SVC-R 1.5	150	125	110	105	85
SVC-R 3.0	192	160	134	150	110

Monophase Shunt Reactors (230 V)

Product Name	A (mm)	B (mm)	C (mm)	D (mm)	E (mm)
SRM 1.0	150	125	105	-	-
SRM 1.5	150	125	120	105	95
SRM 3.0	192	160	144	150	120
SRM 5.0	210	270	180	195	119
SRM 7.5	210	280	210	232	126
SRM 10.0	260	330	200	232	136

Connection Diagram

SVC (5-10) Drive and Monophase Shunt Reactor

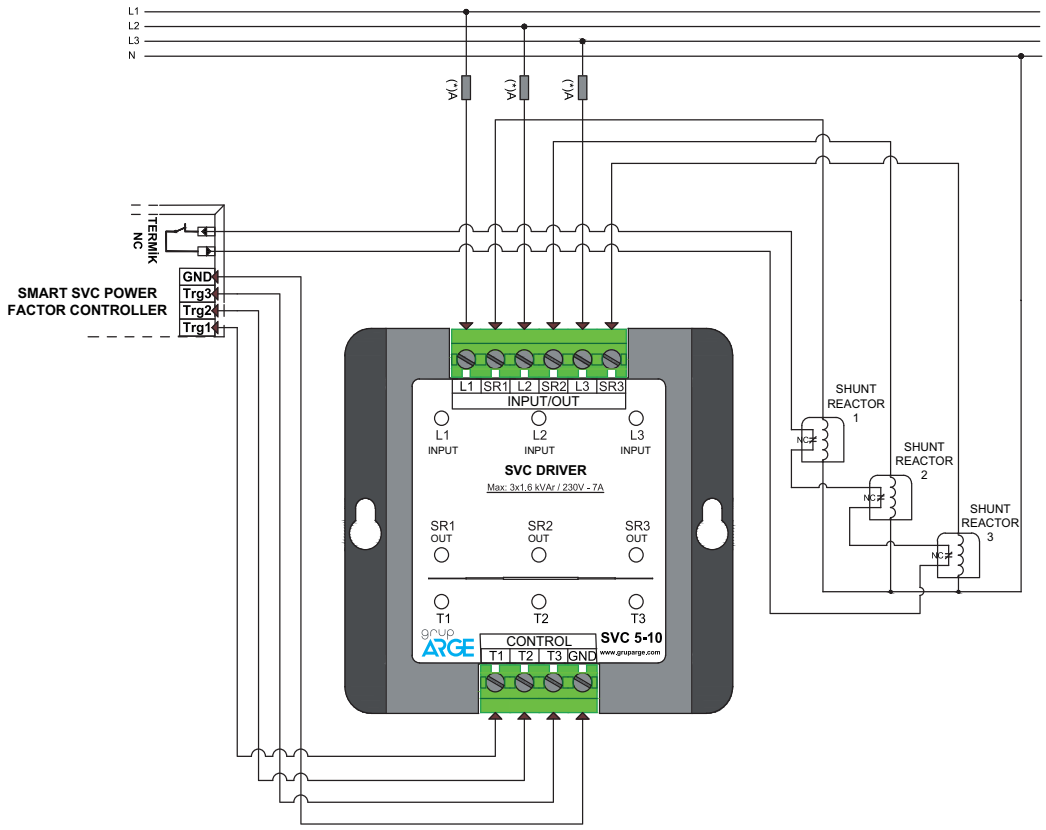

SVC (20-30) Drive and Monophase Shunt Reactor

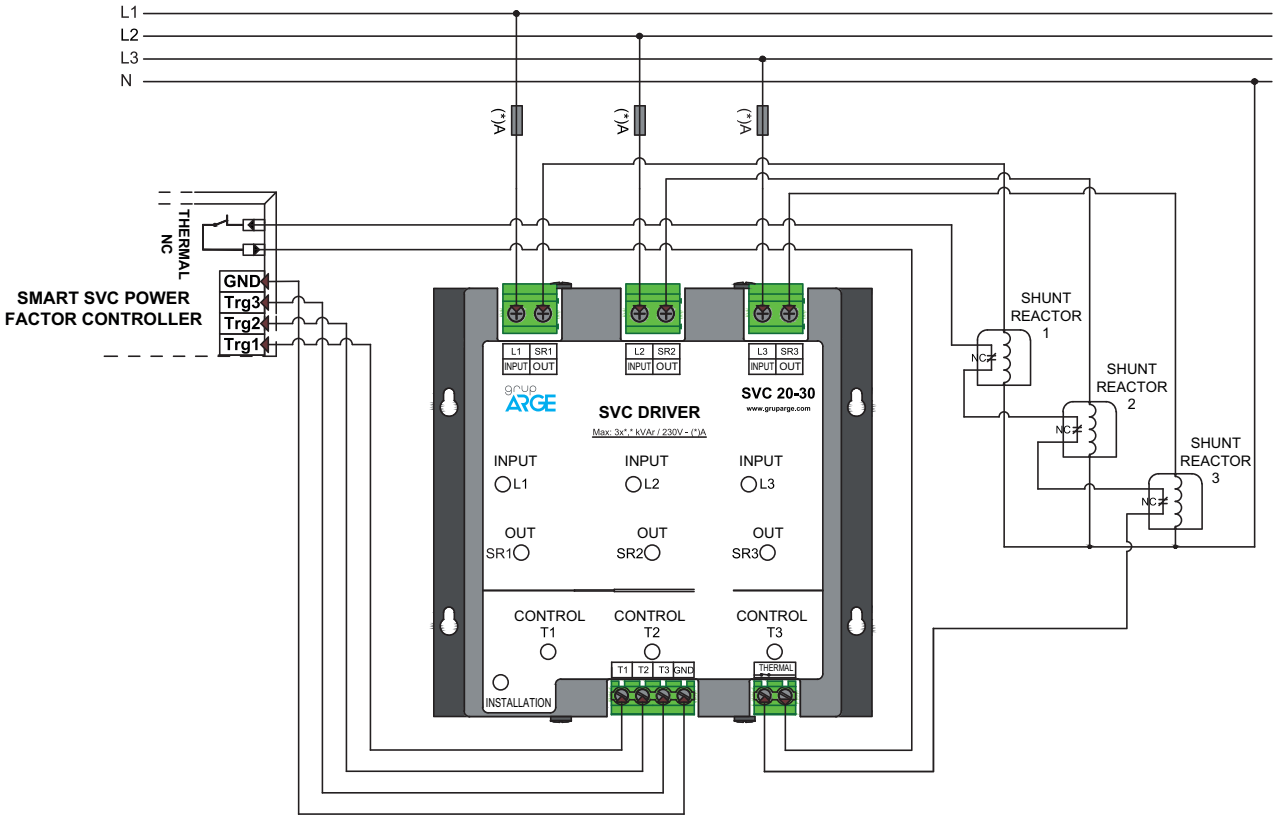

Technical Features

Product Code	Product Name	Product Description	Power (kVAr)	A (Irms)	L (mH)	Connection	Thermal Protection	Nominal Cable Cross Section (mm2)	Weight (kg)
GA5201	SRT 0.5	0.5 kVAr THREE-PHASE SHUNT REACTOR	0,5	0,72	1018,6	Terminal	✓	3(1x2.5) mm²	8,0
GA5202	SRT 1.0	1.0 kVAr THREE-PHASE SHUNT REACTOR	1,0	1,44	509,0	Terminal	✓	3(1x2.5) mm²	11,5
GA5203	SRT 1.5	1.5 kVAr THREE-PHASE SHUNT REACTOR	1,5	2,17	339,50	Terminal	✓	3(1x2.5) mm²	14,5
GA5204	SRT 2.5	2.5 kVAr THREE-PHASE SHUNT REACTOR	2,5	3,61	203,72	Terminal	✓	3(1x2.5) mm²	17,0
GA5205	SRT 5.0	5.0 kVAr THREE-PHASE SHUNT REACTOR	5,0	7,22	101,86	Terminal	✓	3(1x2.5) mm²	27,0
GA5206	SRT 7.5	7.5 kVAr THREE-PHASE SHUNT REACTOR	7,5	10,83	67,90	Terminal	✓	3(1x4) mm²	39,0
GA5207	SRT 10.0	10.0 kVAr THREE-PHASE SHUNT REACTOR	10,0	14,43	50,92	Busbar	✓	3(1x4) mm²	48,0
GA5208	SRT 12.5	12.5 kVAr THREE-PHASE SHUNT REACTOR	12,5	18,04	40,75	Busbar	✓	3(1x4) mm²	57,0
GA5209	SRT 15.0	15.0 kVAr THREE-PHASE SHUNT REACTOR	15,0	21,65	33,95	Busbar	✓	3(1x4) mm²	67,0
GA5210	SRT 20.0	20.0 kVAr THREE-PHASE SHUNT REACTOR	20,0	28,86	25,46	Busbar	✓	3(1x6) mm²	80,0
GA5211	SRT 25.0	25.0 kVAr THREE-PHASE SHUNT REACTOR	25,0	36,08	20,37	Busbar	✓	3(1x10) mm²	96,5
GA5212	SRT 50.0	50.0 kVAr THREE-PHASE SHUNT REACTOR	50,0	72,20	10,18	Busbar	✓	3(1x35) mm²	170,0

SRT 2.5

Technical Drawing

Three-phase Shunt Reactor(400 V)

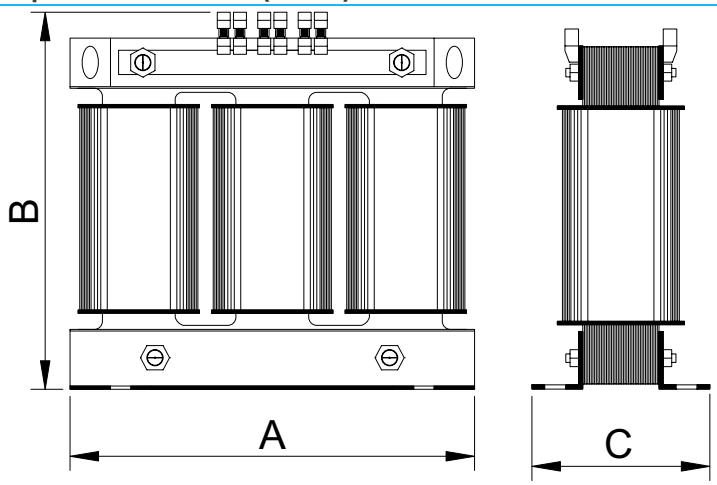

Product Name	A (mm)	B (mm)	C (mm)	D (mm)	E (mm)
SRT 0.5	150	150	72	100	55
SRT 1.0	180	175	85	125	60
SRT 1.5	180	175	115	125	90
SRT 2.5	240	225	100	175	75
SRT 5.0	295	255	170	200	135
SRT 7.5	295	255	180	200	145
SRT 10.0	370	330	190	350	109
SRT 12.5	390	330	210	350	119
SRT 15.0	390	330	220	350	139
SRT 20.0	460	380	220	420	129
SRT 25.0	460	380	230	420	149
SRT 50.0	520	430	290	510	229

• Product sizes indicated in the table may vary. You can contact for detailed information.

Connection Diagram

Three-phase Shunt Reactor (400 V)

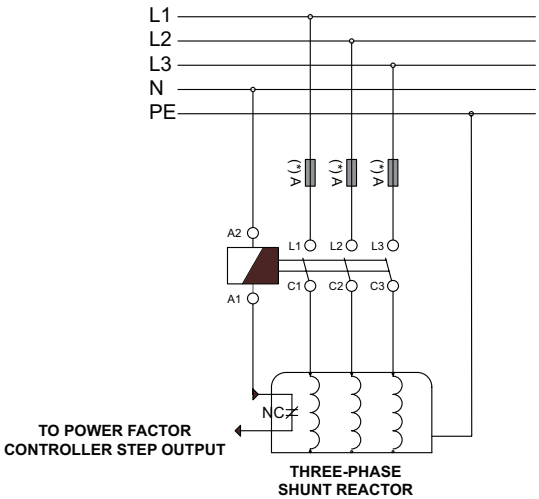

(*)For the recommended fuse current and cable cross-section, please refer to the rated operating current table in the section related to the product of your choice.

Harmonic Filter Selection

According to the voltage harmonic values of the harmonic filters in our list, which are measured while the compensation is off;

• If THDv < 8% and 5th voltage harmonic < 6%; p= 5.67% normal filter or p= 7% normal filter,

• If THDv < 8% and 5th voltage harmonic > 6%; p= 5.67% reinforced filter or p= 7% reinforced filter,

• If THDv > 8% and harmonics are to be filtered, p=5.67% reinforced filter or p=7% reinforced filter,

• If THDv > 8% and only capacitors are to be protected from overcurrent, it is recommended to choose a filter with p=14%.

Considered Sectorally

• In small-scale enterprises with few harmonic generating devices; p=5.67% or p=7% normal filter,

• Where harmonic distortion is relatively high, such as textiles and automotive; p=5.67% or p=7% reinforced filter,

• In places such as iron and steel industry, rolling mills, foundry furnaces, p=14% filter can be used.

Other Issues to Consider

• p=5.67% filters require continuous monitoring as they are very sensitive to the loss of value in capacitors or the increase of harmonics over time. For this reason, it will be safer to use a p=7% filter if the harmonic values measured while the compensation is off are at a level that will not pose a problem for the operation.

• The harmonic filters in our list are designed for the plants where the 5th voltage harmonic does not exceed 6% and the total voltage harmonic does not exceed 8% when the compensation is off. For higher harmonic distortion values, a reinforced filter should be used. Please contact our company for reinforced filters.

Note: For a correct application, it is recommended to make measurements with an analyzer and evaluate the measurement results with our technical team.

MONOPHASE HARMONIC FILTER - CAPACITOR	
(p=%5.67 - 210 Hz; p=%7 - 189 Hz; p=%14 - 134 Hz)	
Harmonic Filter Code Capacitor	Capacitor Product Name
HRM 0.5/5.67 - HRM 0.5/7 - HRM 0.5/14	KND M0.5
HRM 1.0/5.67 - HRM 1.0/7 - HRM 1.0/14	KND M1.0
HRM 1.5/5.67 - HRM 1.5/7 - HRM 1.5/14	KND M1.5
HRM 2.5/5.67 - HRM 2.5/7 - HRM 2.5/14	KND M2.5
HRM 5.0/5.67 - HRM 5.0/7 - HRM 5.0/14	KND M5.0
HRM 7.5/5.67 - HRM 7.5/7 - HRM 7.5/14	KND M7.5
HRM 10.0/5.67 - HRM 10.0/7 - HRM 10.0/14	KND M10.0

THREE-PHASE HARMONIC FILTER - CAPACITOR	
(p=%14, 134 Hz) Harmonic Filter Code	Product Name of the Capacitor to be Used for 525 V
HRT 3.1 / 14	KND B5.0
HRT 5.0 / 14	KND B7.5
HRT 6.25 / 14	KND B10.0
HRT 7.5 / 14	KND B12.5
HRT 10.0 / 14	KND B15.0
HRT 12.5 / 14	KND B20.0
HRT 15.0 / 14	KND B10.0 + KND B12.5
HRT 20.0 / 14	KND B30.0
HRT 25.0 / 14	KND B25.0 + KND B12.5
HRT 30.0 / 14	KND B25.0+ KND B20.0
HRT 40.0 / 14	2xKND B30.0
HRT 50.0 / 14	3xKND B25.0
HRT 60.0 / 14	3xKND B30.0
HRT 75.0 / 14	2xKND B40.0 + KND B30.0
HRT 100.0 / 14	3xKND B40.0 + KND B30.0

THREE-PHASE HARMONIC FILTER - CAPACITOR		
(p=%5.67, 210 Hz) Harmonic Filter Code	Product Name of the Capacitor to be Used for 440 V	Product Name of the Capacitor to be Used for 525 V
HRT 0.5/5.67	KND T0.5	-
HRT 1.0/5.67	KND T1.0	-
HRT 1.5/5.67	KND T1.5	-
HRT 2.5/5.67	KND T2.5	-
HRT 3.1/5.67	2xKND T1.5	KND B5.0
HRT 5.0/5.67	KND T5.0	KND B7.5
HRT 6.25/5.67	KDN T5.0+KND T1.0	KND B10.0
HRT 7.5/5.67	KND T7.5	KND B12.5
HRT 10.0/5.67	KND T10.0	KND B15.0
HRT 12.5/5.67	KND T12.5	KND B20.0
HRT 15.0/5.67	KND T15.0	KND B25.0
HRT 20.0/5.67	KND T18.6	KND B20.0 + KND B12.5
HRT 25.0/5.67	KND T23.2	KND B40.0
HRT 30.0/5.67	KND T15.0+KND T12.5	2xKND B25.0
HRT 40.0/5.67	2xKND T18.6	KND B40.0 + KND B25.0
HRT 50.0/5.67	2xKND T23.2	2xKND B40.0
HRT 60.0/5.67	KND T30.0+KND T25.0	2xKND B40.0 +KND B15.0
HRT 75.0/5.67	3xKND T23.2	3xKND B40.0
HRT 100.0/5.67	4xKND T23.2	4xKND B40.0

THREE-PHASE HARMONIC FILTER - CAPACITOR		
(p=%7, 189 Hz) Harmonic Filter Code	Product Name of the Capacitor to be Used for 440 V	Product Name of the Capacitor to be Used for 525 V
HRT 0.5/7	KND T0.5	-
HRT 1.0/7	KND T1.0	-
HRT 1.5/7	KND T1.5	-
HRT 2.5/7	KND T2.5	-
HRT 3.1/7	2xKND T1.5	KND B5.0
HRT 5.0/7	KND T5.0	KND B7.5
HRT 6.25/7	KDN T5.0+KND T1.0	KND B10.0
HRT 7.5/7	KND T7.5	KND B12.5
HRT 10.0/7	KND T10.0	KND B15.0
HRT 12.5/7	KND T12.5	KND B20.0
HRT 15.0/7	KND T15.0	KND B25.0
HRT 20.0/7	KND T18.6	KND B20.0 + KND B12.5
HRT 25.0/7	KND T23.2	KND B40.0
HRT 30.0/7	KND T15.0+KND T12.5	2xKND B25.0
HRT 40.0/7	2xKND-T18.6	KND B40.0 + KND B25.0
HRT 50.0/7	2xKND-T23.2	2xKND B40.0
HRT 60.0/7	KND T30.0+KND T25	2xKND B40.0 + KND B20.0
HRT 75.0/7	3xKND T23.2	3xKND B40.0
HRT 100.0/7	4xKND T23.2	4xKND B40.0

• The capacitor recommended to be used for the selected harmonic filter is indicated by the product name on our price list, not by the power value.

Technical Features

Product Code	Product Name	Product Description	A (Irms)	L (mH)	Connection	Weight (kg)
GA5629	HRT 10/7-7	10 kVAr THREE-PHASE HARMONIC FILTER (7)	15,21	3,84	Terminal	8
GA5630	HRT 12.5/7-7	12.5 kVAr THREE-PHASE HARMONIC FILTER (7)	19,11	3,07	Terminal	9,3
GA5631	HRT 15/7-7	15 kVArTHREE-PHASE HARMONIC FILTER (7)	24,56	2,56	Terminal	10,5
GA5632	HRT 20/7-7	20 kVAr THREE-PHASE HARMONIC FILTER (7)	30,63	1,92	Busbar (M8)	13
GA5633	HRT 25/7-7	25 kVAr THREE-PHASE HARMONIC FILTER (7)	36,01	1,53	Busbar (M8)	13,6
GA5634	HRT 30/7-7	30 kVAr THREE-PHASE HARMONIC FILTER (7)	49,01	1,28	Busbar (M8)	17
GA5635	HRT 40/7-7	40 kVAr THREE-PHASE HARMONIC FILTER (7)	60,94	0,96	Busbar (M8)	18,6
GA5636	HRT 50/7-7	50 kVAr THREE-PHASE HARMONIC FILTER (7)	71,44	0,76	Busbar (M8)	21
GA5637	HRT 60/7-7	60 kVAr THREE-PHASE HARMONIC FILTER (7)	88,05	0,64	Busbar (M10)	27
GA5638	HRT 75/7-7	75 kVAr THREE-PHASE HARMONIC FILTER (7)	114,1	0,51	Busbar (M10)	36
GA5639	HRT 100/7-7	100 kVAr THREE-PHASE HARMONIC FILTER (7)	153,0	0,38	Busbar (M10)	44

HRT 20.0

HRT 50.0

Technical Drawing

Three-Phase Harmonic Filter (P=%7, THDv<%7 - 189 Hz)

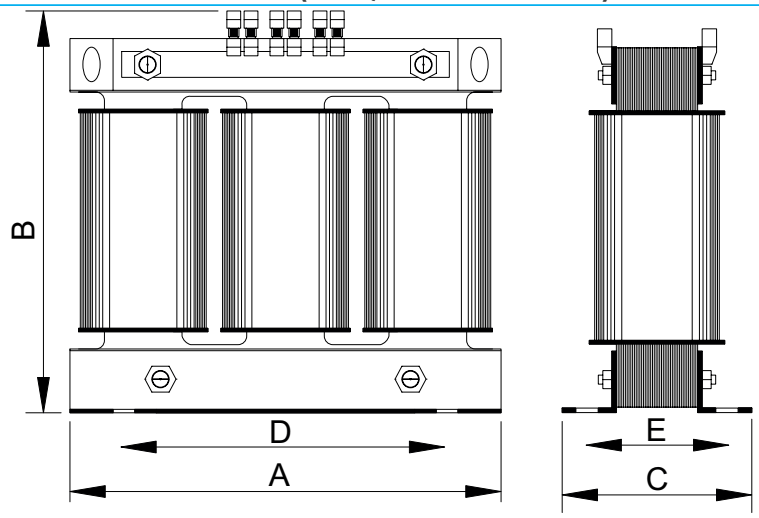

Product Name	A (mm)	B (mm)	C (mm)	D (mm)	E (mm)
HRT 10/7-7	180	175	105	125	80
HRT 12.5/7-7	180	175	105	125	80
HRT 15/7-7	180	175	115	125	90
HRT 20/7-7	240	210	105	175	80
HRT 25/7-7	240	210	105	175	80
HRT 30/7-7	240	210	125	175	100
HRT 40/7-7	240	210	135	175	115
HRT 50/7-7	270	240	135	200	125
HRT 60/7-7	270	240	150	200	125
HRT 75/7-7	295	255	175	200	135
HRT 100/7-7	350	310	180	250	145

• Product sizes indicated in the table may vary. You can contact for detailed information.

Connection Diagram

Three-Phase Harmonic Filter (P=%7, THDv<%7 - 189 Hz)

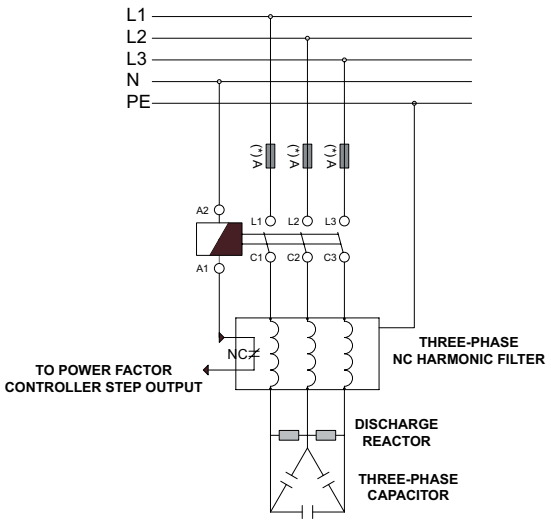

(*)For the recommended fuse current and cable cross-section, please refer to the rated operating current table in the section related to the product of your choice.

Important Note:
The product group on this page is according to the voltage harmonic values measured while the compensation is off; It should be used in enterprises with THDv<7% and voltage harmonics <5%. For higher harmonic distortion values, please review the description on Page 34.

Technical Features

Monophase Harmonic Filter (P=% 5.67 - 210 Hz)

Product Code	Product Name	Product Description	A (Irms)	L (mH)	Connection	Weight (kg)
GA5311	HRM 0.5/5.67	0.5 kVAr MONOPHASE HARMONIC FILTER (5.67)	2,60	20,20	Terminal	1,35
GA5312	HRM 1.0/5.67	1.0 kVAr MONOPHASE HARMONIC FILTER (5.67)	5,21	10,10	Terminal	1,95
GA5313	HRM 1.5/5.67	1.5 kVAr MONOPHASE HARMONIC FILTER (5.67)	7,82	6,73	Terminal	2,45
GA5314	HRM 2.5/5.67	2.5 kVAr MONOPHASE HARMONIC FILTER (5.67)	13,04	4,04	Terminal	3,80
GA5315	HRM 5.0/5.67	5.0 kVAr MONOPHASE HARMONIC FILTER (5.67)	26,08	2,02	Busbar (M8)	6,35
GA5316	HRM 7.5/5.67	7.5 kVAr MONOPHASE HARMONIC FILTER (5.67)	39,13	1,35	Busbar (M8)	8,30
GA5317	HRM 10.0/5.67	10.0 kVAr MONOPHASE HARMONIC FILTER (5.67)	52,17	1,01	Busbar (M8)	11,30

HRM 1.5

Monophase Harmonic Filter (P=% 7 - 189 Hz)

Product Code	Product Name	Product Description	A (Irms)	L (mH)	Connection	Weight (kg)
GA5411	HRM 0.5/7	0.5 kVAr MONOPHASE HARMONIC FILTER (7)	2,47	25,34	Terminal	1,3
GA5412	HRM 1.0/7	1.0 kVAr MONOPHASE HARMONIC FILTER (7)	4,95	12,67	Terminal	1,5
GA5413	HRM 1.5/7	1.5 kVAr MONOPHASE HARMONIC FILTER (7)	7,43	8,45	Terminal	2,5
GA5414	HRM 2.5/7	2.5 kVAr MONOPHASE HARMONIC FILTER (7)	12,38	5,07	Terminal	4,0
GA5415	HRM 5.0/7	5.0 kVAr MONOPHASE HARMONIC FILTER (7)	24,77	2,53	Busbar (M8)	6,5
GA5416	HRM 7.5/7	7.5 kVAr MONOPHASE HARMONIC FILTER (7)	37,16	1,69	Busbar (M8)	8,5
GA5417	HRM 10.0/7	10.0 kVAr MONOPHASE HARMONIC FILTER (7)	49,15	1,27	Busbar (M8)	11,5

HRM 5.0

Monophase Harmonic Filter (P=% 14 - 134 Hz)

Product Code	Product Name	Product Description	A (Irms)	L (mH)	Connection	Weight (kg)
GA5511	HRM 0.5/14	0.5 kVAr MONOPHASE HARMONIC FILTER (14)	2,23	54,52	Terminal	1,35
GA5512	HRM 1.0/14	1.0 kVAr MONOPHASE HARMONIC FILTER (14)	4,47	27,26	Terminal	1,95
GA5513	HRM 1.5/14	1.5 kVAr MONOPHASE HARMONIC FILTER (14)	6,71	18,17	Terminal	2,45
GA5514	HRM 2.5/14	2.5 kVAr MONOPHASE HARMONIC FILTER (14)	11,19	10,90	Terminal	3,80
GA5515	HRM 5.0/14	5.0 kVAr MONOPHASE HARMONIC FILTER (14)	22,39	5,45	Busbar (M8)	6,35
GA5516	HRM 7.5/14	7.5 kVAr MONOPHASE HARMONIC FILTER (14)	33,58	3,63	Busbar (M8)	8,30
GA5517	HRM 10.0/14	10.0 kVAr MONOPHASE HARMONIC FILTER (14)	44,78	2,73	Busbar (M8)	11,30

HRM 10.0

Technical Drawing

Monophase Harmonic Filter (P=%5.67, %7, %14)

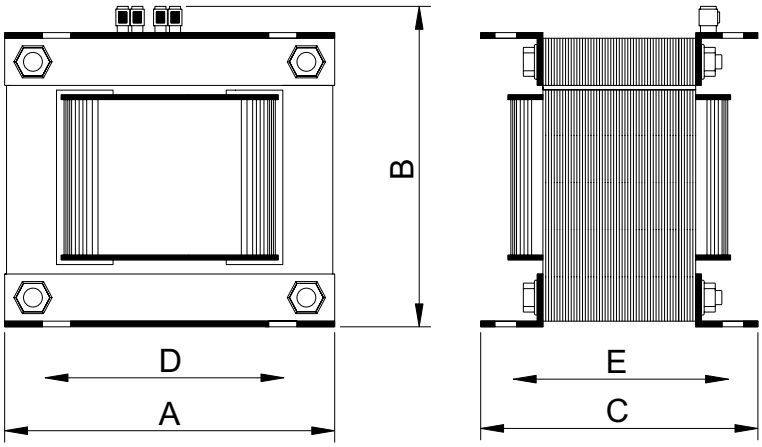

Monophase Harmonic Filter (P=%5.67)

Product Name	A (mm)	B (mm)	C (mm)	D (mm)	E (mm)
HRM 0.5/5.67	84	70	60	70	45
HRM 1.0/5.67	84	70	80	70	65
HRM 1.5/5.67	84	70	80	70	65
HRM 2.5/5.67	96	80	96	80	80
HRM 5.0/5.67	120	100	98	100	80
HRM 7.5/5.67	120	100	120	100	100
HRM 10.0/5.67	150	125	128	125	100

• Product sizes indicated in the table may vary. You can contact for detailed information.

Monophase Harmonic Filter (P=%7)

Product Name	A (mm)	B (mm)	C (mm)	D (mm)	E (mm)
HRM 0.5/7	84	70	60	70	45
HRM 1.0/7	84	70	80	70	65
HRM 1.5/7	84	70	80	70	65
HRM 2.5/7	96	80	96	8	80
HRM 5.0/7	120	100	98	100	80
HRM 7.5/7	120	100	120	100	100
HRM 10.0/7	150	125	110	120	80

Monophase Harmonic Filter (P=%14)

Product Name	A (mm)	B (mm)	C (mm)	D (mm)	E (mm)
HRM 0.5/14	84	70	60	70	45
HRM 1.0/14	84	70	80	70	65
HRM 1.5/14	84	70	100	70	95
HRM 2.5/14	96	80	96	80	80
HRM 5.0/14	120	100	100	100	80
HRM 7.5/14	120	100	120	100	100
HRM 10.0/14	150	125	150	120	120

Connection Diagram

Monophase Harmonic Filter (P=%5.67, %7, %14)

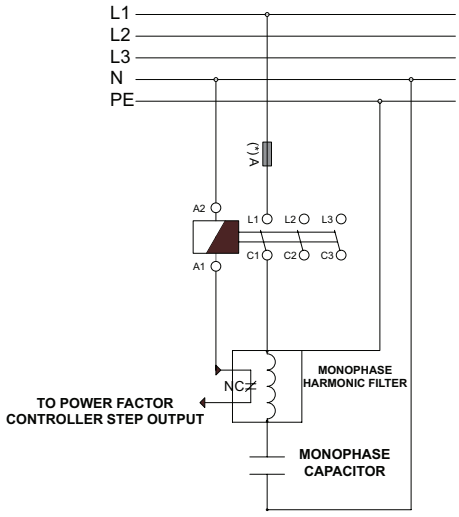

(*)For the recommended fuse current and cable cross-section, please refer to the rated operating current table in the section related to the product of your choice.

Technical Features

Three-Phase Harmonic Filter (P=% 5.67 - 210 Hz)

Product Code	Product Name	Product Description	A (Irms)	L (mH)	Connection	Weight (kg)
GA5321	HRT 0.5/5.67	5.0 kVAr THREE-PHASE HARMONIC FILTER (5.67)	0,90	61,20	Terminal	1,5
GA5322	HRT 1.0/5.67	1.0 kVAr THREE-PHASE HARMONIC FILTER (5.67)	1,80	30,61	Terminal	2,2
GA5323	HRT 1.5/5.67	1.5 kVAr THREE-PHASE HARMONIC FILTER (5.67)	2,81	20,40	Terminal	3,0
GA5324	HRT 2.5/5.67	2.5 kVAr THREE-PHASE HARMONIC FILTER (5.67)	4,51	12,24	Terminal	3,3
GA5325	HRT 3.12/5.67	3.12 kVAr THREE-PHASE HARMONIC FILTER (5.67)	5,63	9,81	Terminal	5,0
GA5326	HRT 5.0/5.67	5.0 kVAr THREE-PHASE HARMONIC FILTER (5.67)	9,02	6,12	Terminal	5,5
GA5327	HRT 6.25/5.67	6.25 kVAr THREE-PHASE HARMONIC FILTER (5.67)	11,28	4,90	Terminal	6,0
GA5328	HRT 7.5/5.67	7.5 kVAr THREE-PHASE HARMONIC FILTER (5.67)	13,53	4,08	Terminal	8,0
GA5329	HRT 10.0/5.67	10.0 kVAr THREE-PHASE HARMONIC FILTER (5.67)	18,04	3,06	Terminal	9,0
GA5330	HRT 12.5/5.67	12.5 kVAr THREE-PHASE HARMONIC FILTER (5.67)	22,55	2,45	Terminal	9,0
GA5331	HRT 15.0/5.67	15.0 kVAr THREE-PHASE HARMONIC FILTER (5.67)	27,06	2,04	Terminal	14,5
GA5332	HRT 20.0/5.67	20.0 kVAr THREE-PHASE HARMONIC FILTER (5.67)	36,08	1,53	Busbar (M8)	16,0
GA5333	HRT 25.0/5.67	25.0 kVAr THREE-PHASE HARMONIC FILTER (5.67)	45,11	1,22	Busbar (M8)	21,0
GA5334	HRT 30.0/5.67	30.0 kVAr THREE-PHASE HARMONIC FILTER (5.67)	49,15	1,02	Busbar (M8)	21,0
GA5335	HRT 40.0/5.67	40.0 kVAr THREE-PHASE HARMONIC FILTER (5.67)	72,17	0,76	Busbar (M8)	23,5
GA5336	HRT 50.0/5.67	50.0 kVAr TTHREE-PHASE HARMONIC FILTER (5.67)	90,21	0,61	Busbar (M8)	27,0
GA5337	HRT 60.0/5.67	60.0 kVAr THREE-PHASE HARMONIC FILTER (5.67)	108,25	0,51	Busbar (M8)	31,0
GA5338	HRT 75.0/5.67	75.0 kVAr THREE-PHASE HARMONIC FILTER (5.67)	120,16	0,41	Busbar (M10)	37,0
GA5339	HRT 100.0/5.67	100.0 kVAr THREE-PHASE HARMONIC FILTER (5.67)	160,21	0,31	Busbar (M10)	44,0

HRT 2.5

Three-Phase Harmonic Filter (P=% 7, THDv<%8 - 189 Hz)

Product Code	Product Name	Product Description	A (Irms)	L (mH)	Connection	Weight (kg)
GA5421	HRT 0.5/7-8	0.5 kVAr THREE-PHASE HARMONIC FILTER (7)	0,82	76,67	Terminal	1,5
GA5422	HRT 1.0/7-8	1.0 kVAr THREE-PHASE HARMONIC FILTER (7)	1,64	38,33	Terminal	2,2
GA5423	HRT 1.5/7-8	1.5 kVAr THREE-PHASE HARMONIC FILTER (7)	2,56	25,53	Terminal	3,0
GA5424	HRT 2.5/7-8	2.5 kVAr THREE-PHASE HARMONIC FILTER (7)	4,10	15,32	Terminal	3,3
GA5425	HRT 3.12/7-8	3.12 kVAr THREE-PHASE HARMONIC FILTER (7)	5,11	12,28	Terminal	4,2
GA5426	HRT 5.0/7-8	5.0 kVAr THREE-PHASE HARMONIC FILTER (7)	8,20	7,66	Terminal	5,0
GA5427	HRT 6.25/7-8	6.25 kVAr THREE-PHASE HARMONIC FILTER (7)	10,24	6,13	Terminal	6,0
GA5428	HRT 7.5/7-8	7.5 kVAr THREE-PHASE HARMONIC FILTER (7)	12,29	5,11	Terminal	6,0
GA5429	HRT 10.0/7-8	10.0 kVAr THREE-PHASE HARMONIC FILTER (7)	16,38	3,83	Terminal	7,0
GA5430	HRT 12.5/7-8	12.5 kVAr THREE-PHASE HARMONIC FILTER (7)	20,48	3,06	Terminal	9,0
GA5431	HRT 15.0/7-8	15.0 kVAr THREE-PHASE HARMONIC FILTER (7)	24,57	2,55	Terminal	11,0
GA5432	HRT 20.0/7-8	20.0 kVAr THREE-PHASE HARMONIC FILTER (7)	32,76	1,92	Busbar (M8)	14,5
GA5433	HRT 25.0/7-8	25.0 kVAr THREE-PHASE HARMONIC FILTER (7)	41,00	1,53	Busbar (M8)	15,0
GA5434	HRT 30.0/7-8	30.0 kVAr THREE-PHASE HARMONIC FILTER (7)	49,15	1,28	Busbar (M8)	17,0
GA5435	HRT 40.0/7-8	40.0 kVAr THREE-PHASE HARMONIC FILTER (7)	65,53	0,96	Busbar (M8)	21,0
GA5436	HRT 50.0/7-8	50.0 kVAr THREE-PHASE HARMONIC FILTER (7)	82,00	0,77	Busbar (M8)	22,0
GA5437	HRT 60.0/7-8	60.0 kVAr THREE-PHASE HARMONIC FILTER (7)	98,30	0,64	Busbar (M8)	30,0
GA5438	HRT 75.0/7-8	75.0 kVAr THREE-PHASE HARMONIC FILTER (7)	119,1	0,51	Busbar (M10)	40,0
GA5439	HRT 100.0/7-8	100.0 kVAr THREE-PHASE HARMONIC FILTER (7)	158,8	0,38	Busbar (M10)	50,0

HRT 20.0

Technical Features

Three-Phase Harmonic Filter (P=% 14 - 134 Hz)

Product Code	Product Name	Product Description	A (Irms)	L (mH)	Connection	Weight (kg)
GA5521	HRT 0.5/14	0.5 kVAr THREE-PHASE HARMONIC FILTER (14)	0,77	165,80	Terminal	1,8
GA5522	HRT 1.0/14	1.0 kVAr THREE-PHASE HARMONIC FILTER (14)	1,53	82,90	Terminal	2,5
GA5523	HRT 1.5/14	1.5 kVAr THREE-PHASE HARMONIC FILTER (14)	2,39	53,15	Terminal	4,5
GA5524	HRT 2.5/14	2.5 kVAr THREE-PHASE HARMONIC FILTER (14)	3,82	33,16	Terminal	5,0
GA5525	HRT 3.12/14	3.12 kVAr THREE-PHASE HARMONIC FILTER (14)	4,77	26,57	Terminal	6,5
GA5526	HRT 5.0/14	5.0 kVAr THREE-PHASE HARMONIC FILTER (14)	7,65	16,58	Terminal	7,5
GA5527	HRT 6.25/14	6.25 kVAr THREE-PHASE HARMONIC FILTER (14)	9,56	13,26	Terminal	8,5
GA5528	HRT 7.5/14	7.5 kVAr THREE-PHASE HARMONIC FILTER (14)	11,47	11,05	Terminal	9,0
GA5529	HRT 10.0/14	10.0 kVAr THREE-PHASE HARMONIC FILTER (14)	15,30	8,29	Terminal	11,0
GA5530	HRT 12.5/14	12.5 kVAr THREE-PHASE HARMONIC FILTER (14)	19,12	6,63	Terminal	13,5
GA5531	HRT 15.0/14	15.0 kVAr THREE-PHASE HARMONIC FILTER (14)	22,95	5,53	Terminal	14,0
GA5532	HRT 20.0/14	20.0 kVAr THREE-PHASE HARMONIC FILTER (14)	30,60	4,15	Busbar (M8)	20,5
GA5533	HRT 25.0/14	25.0 kVAr THREE-PHASE HARMONIC FILTER (14)	38,25	3,32	Busbar (M8)	22,0
GA5534	HRT 30.0/14	30.0 kVAr THREE-PHASE HARMONIC FILTER (14)	45,90	2,76	Busbar (M8)	31,0
GA5535	HRT 40.0/14	40.0 kVAr THREE-PHASE HARMONIC FILTER (14)	61,20	2,07	Busbar (M8)	35,0
GA5536	HRT 50.0/14	50.0 kVAr THREE-PHASE HARMONIC FILTER (14)	76,50	1,66	Busbar (M8)	41,0
GA5537	HRT 60.0/14	60.0 kVAr THREE-PHASE HARMONIC FILTER (14)	91,80	1,38	Busbar (M8)	44,0
GA5538	HRT 75.0/14	75.0 kVAr THREE-PHASE HARMONIC FILTER (14)	119	1,10	Busbar (M10)	72,0
GA5539	HRT 100.0/14	100.0 kVAr THREE-PHASE HARMONIC FILTER (14)	159	0,82	Busbar (M10)	85,0

- **Products without given data are produced specially to order, please contact for detailed information.**
- **Upon request, our harmonic filters can also be produced with copper busbar output.**
- **Please contact us for our boosted harmonic filters.**

HRT 50.0

Connection Diagram

Three-Phase Harmonic Filter (P=%5.67, %7, %14)

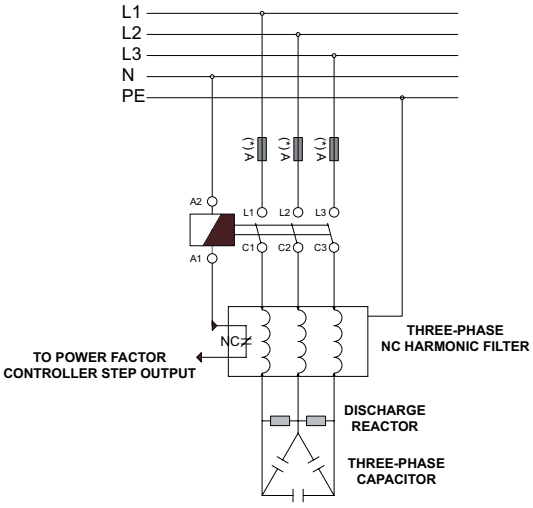

(*)For the recommended fuse current and cable cross-section, please refer to the rated operating current table in the section related to the product of your choice.

Technical Drawing

Three-Phase Harmonic Filter (P=%5.67, %7, %14)

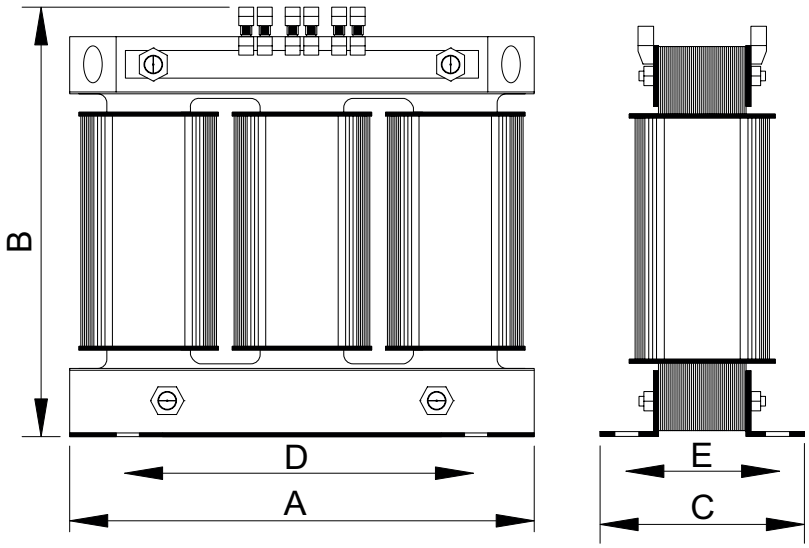

• Product sizes indicated in the table may vary. You can contact for detailed information.

Three-Phase Harmonic Filter (P=% 5.67 - 210 Hz)

Product Name	A (mm)	B (mm)	C (mm)	D (mm)	E (mm)
HRT 0.5/5.67	150	148	72	100	52
HRT 1.0/5.67	150	148	72	100	52
HRT 1.5/5.67	150	148	72	100	52
HRT 2.5/5.67	150	148	72	100	52
HRT 3.12/5.67	150	148	72	100	52
HRT 5.0/5.67	150	148	89	100	70
HRT 6.25/5.67	180	170	97	125	72
HRT 7.5/5.67	180	170	97	125	72
HRT 10.0/5.67	180	180	105	125	80
HRT 12.5/5.67	180	180	105	125	80
HRT 15.0/5.67	235	230	100	175	80
HRT 20.0/5.67	235	230	100	175	80
HRT 25.0/5.67	240	235	120	175	100
HRT 30.0/5.67	270	240	135	200	110
HRT 40.0/5.67	270	240	150	200	125
HRT 50.0/5.67	295	255	165	200	130
HRT 60.0/5.67	295	255	170	200	135
HRT 75.0/5.67	355	310	170	250	135
HRT 100.0/5.67	355	310	190	250	155

Three-Phase Harmonic Filter (P=% 7, THDv<%8 - 189 Hz)

Product Name	A (mm)	B (mm)	C (mm)	D (mm)	E (mm)
HRT 0.5/7-8	150	148	72	100	52
HRT 1.0/7-8	150	148	72	100	52
HRT 1.5/7-8	150	148	72	100	52
HRT 2.5/7-8	150	148	72	100	52
HRT 3.12/7-8	150	148	72	100	52
HRT 5.0/7-8	180	175	85	125	60
HRT 6.25/7-8	180	175	85	125	60
HRT 7.5/7-8	180	175	105	125	80
HRT 10.0/7-8	180	175	115	125	90
HRT 12.5/7-8	180	175	115	125	90
HRT 15.0/7-8	180	175	115	125	90
HRT 20.0/7-8	240	210	105	175	80
HRT 25.0/7-8	240	210	125	175	80
HRT 30.0/7-8	240	210	135	175	110
HRT 40.0/7-8	300	255	145	200	105
HRT 50.0/7-8	270	240	150	200	125
HRT 60.0/7-8	295	255	175	200	135
HRT 75.0/7-8	295	255	205	200	165
HRT 100.0/7-8	355	310	195	250	155

Three-Phase Harmonic Filter (P=% 14 - 134 Hz)

Product Name	A (mm)	B (mm)	C (mm)	D (mm)	E (mm)
HRT 0.5/14	150	150	72	100	55
HRT 1.0/14	150	150	72	100	55
HRT 1.5/14	150	150	72	100	55
HRT 2.5/14	180	175	85	125	60
HRT 3.12/14	180	175	85	125	60
HRT 5.0/14	180	175	115	125	90
HRT 6.25/14	180	175	115	125	90
HRT 7.5/14	240	225	100	175	75
HRT 10.0/14	240	225	100	175	75
HRT 12.5/14	240	225	100	175	75
HRT 15.0/14	240	225	110	175	85
HRT 20.0/14	270	240	135	200	110
HRT 25.0/14	270	240	150	200	125
HRT 30.0/14	295	255	165	200	130
HRT 40.0/14	295	255	170	200	135
HRT 50.0/14	300	255	180	200	145
HRT 60.0/14	355	310	190	250	155
HRT 75.0/14	355	310	210	250	175
HRT 100.0/14	400	360	210	250	175

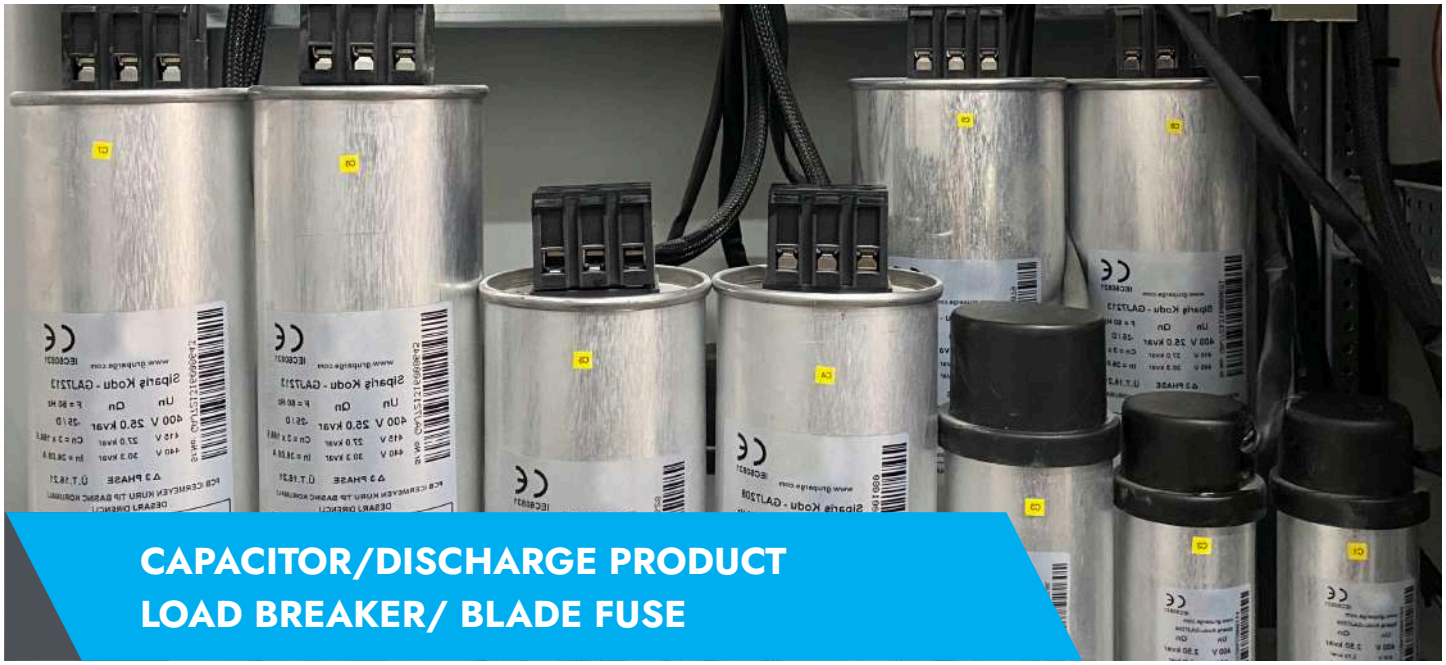

CAPACITOR/DISCHARGE PRODUCT LOAD BREAKER/ BLADE FUSE

Capacitors

Electric motors, transformer etc. power capacitors are used to meet the reactive power requirement in inductive enterprises where devices are located. Power factor controllers, contactors or semiconductor switching elements are activated and deactivated through capacitors to meet the capacitive needs of the enterprise and ensure that the reactive values remain below the desired rates.

Key Features

- **Standard:** IEC 60831-1, IEC 60831-2
- **Nominal Voltages:** 230 - 400 - 440 - 480 - 525 V AC
- **Nominal Frequency::** 50 - 60 Hz
- **Dielectric Losses:** (W /kVAr) <0,20
- **Total Losses:** (W/ kVAr) <0,4
- **Maximum Voltage:** Un+%10 (8/24 hours).
- **Maximum Current:** 1,5 x In
- **Capacity Tolerance:** %-5 - %+10
- **Terminal Test Voltage:** 2,15 x Un, AC 2S
- **Case Terminal Test Voltage:** 3 kV, AC 10S
- **Pulse Current (Inrush) Maximum:** 200 x In
- **Protection:** It has 3 phase circuit separator sensitive to excessive pressure.
- **Service Life Of Capacitors Under Normal Conditions:** 130.000 hours at temperature level D (+55 ˚C) and 150.000 hours at temperature level C (+50 ˚C).
- **Ambient Temperature In Operating Environment:** -40 ˚C to +55 ˚C
- **Insulation System:** Dry type, composed of metallized polypropylene (MKP) film with selfhealing properties.
- **Absorption:** PCB-free and resinous protection.
- **Humidity In The Working Environment:** %95<
- **Discharge Time:** The internal discharge resistor can reduce the voltage across the capacitor to 50 V in 1 minute.

Discharge Reactor and Discharge Resistor

It ensures that capacitors are discharged in a short time in enterprises where there are fast loads. In this way, it extends the life of capacitors and contactors.

Key Features

- **Nominal Voltage:** 180 - 690 V AC.
- **Nominal Frequency:** 50 Hz.
- **Discharge Time:** 12,5 kVAr yük için t<1,2 sn, 25 kVAr yük için t<2,5 sn, 50 kVAr yük için t<5 sn.
- **The Power Of The Low Voltage Capacitor To Be Discharged;** Maksimum 50 kVAr.
- 2 Units are used for the load between 50-100 kVAr
- **Mounting:** Suitable for in-panel rail mounting.
- **Protection Class:** IP40.
- Discharge reactor is recommended to be used together with compensation contactors.
- Discharge resistor is recommended to be used together with static contactor.

NH Fused Load Breakers

Grup Arge Horizontal Type Load Breakers are manufactured in accordance with TS EN 60947-3 CE norms. Body material is 960 ˚C heat resistant thermoplastic material and current passing parts are 99.9% purity electrolytic copper.

NH Blade Fuses

Grup Arge NH blade fuses and fuse bases are manufactured in accordance with TS EN 60269-1 standard. Steatite material, which is highly resistant to high temperatures and short circuits, is used as body material.

Technical Features

Product Code	Product Name	Product Description	Current (A) (for 230 V)	Power kVAr 230 (V)	Power kVAr 400 (V)	Weight (kg)
GA7101	KND M0.25	0.25 kVAr 230V CAPACITOR	1,08	0,25	0,75	0,60
GA7102	KND M0.5	0.5 kVAr 230V CAPACITOR	2,17	0,50	1,50	0,60
GA7103	KND M1.0	1.0 kVAr 230V CAPACITOR	4,34	1,00	3,00	0,70
GA7104	KND M1.5	1.5 kVAr 230V CAPACITOR	6,52	1,50	4,50	0,70
GA7105	KND M2.5	2.5 kVAr 230V CAPACITOR	10,86	2,50	7,50	1,15
GA7106	KND M5.0	5.0 kVAr 230V CAPACITOR	21,73	5,00	15,00	1,65
GA7107	KND M7.5	7.5 kVAr 230V CAPACITOR	32,06	7,50	22,50	2,90
GA7108	KND M10.0	10.0 kVAr 230V CAPACITOR	43,47	10,00	30,00	2,90

KND M1.0

Technical Drawing

Monophase Capacitors (230 V)

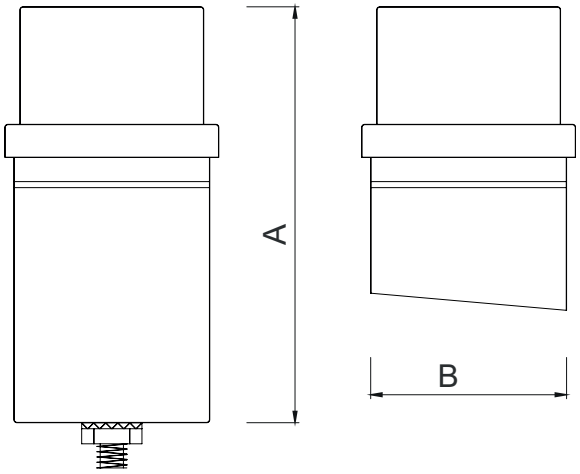

Front View

Product Name	A (mm)	B (mm)
KND M0.25	90	50
KND M0.5	100	50
KND M1.0	100	65
KND M1.5	130	65
KND M2.5	195	75
KND M5.0	205	90
KND M7.5	245	100
KND M10.0	245	117

Connection Diagram

Monophase Capacitors (230 V)

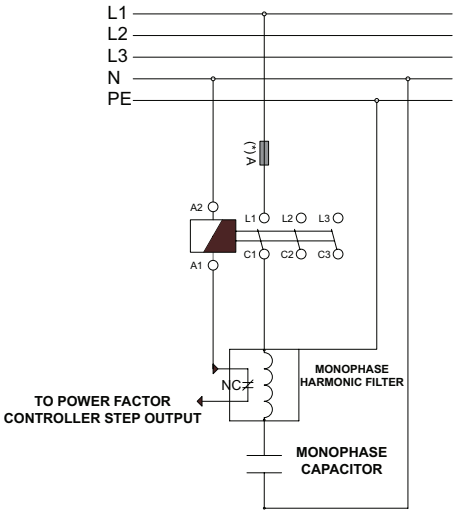

(*)For the recommended fuse current and cable cross-section, please refer to the rated operating current table in the section related to the product of your choice.

Technical Features

Product Code	Product Name	Product Description	Current (A) (for 400 V)	Power kVAr 400 (V)	Power kVAr 440 (V)	Weight (kg)
GA7201	KND T0.5	0.5/0.61 kVAr 400V/440V CAPACITOR	0,72	0,5	0,61	0,60
GA7202	KND T1.0	1.0/1.21 kVAr 400V/440V CAPACITOR	1,44	1,0	1,21	0,60
GA7203	KND T1.5	1.5/1.82 kVAr 400V/440V CAPACITOR	2,16	1,5	1,82	0,60
GA7204	KND T2.5	2.5/3.03 kVAr 400V/440V CAPACITOR	3,60	2,5	3,03	0,70
GA7205	KND T5.0	5.0/6.05 kVAr 400V/440V CAPACITOR	7,21	5,0	6,05	1,10
GA7206	KND T7.5	7.5/9.08 kVAr 400V/440V CAPACITOR	10,82	7,5	9,08	1,10
GA7207	KND T10.0	10.0/12.1 kVAr 400V/440V CAPACITOR	14,43	10,0	12,10	1,70
GA7208	KND T12.5	12.5/15.12 kVAr 400V/440V CAPACITOR	18,04	12,5	15,12	1,70
GA7209	KND T15.0	15.0/18.15 kVAr 400V/440V CAPACITOR	21,65	15,0	18,15	1,85
GA7210	KND T18.6	18.6/22.5 kVAr 400V/440V CAPACITOR	26,87	18,6	22,50	2,45
GA7211	KND T20.0	20.0/24.2 kVAr 400V/440V CAPACITOR	28,86	20,0	24,20	2,90
GA7212	KND T23.2	23.2/28.1 kVAr 400V/440V CAPACITOR	33,50	23,2	28,10	3,15
GA7213	KND T25.0	25.0/30.25 kVAr 400V/440V CAPACITOR	36,08	25,0	30,25	3,30
GA7214	KND T30.0	30.0/36.3 kVAr 400V/440V CAPACITOR	43,30	30,0	36,30	3,45

KND T5.0

Technical Drawing

Three-phase Capacitors (400 / 440 V)

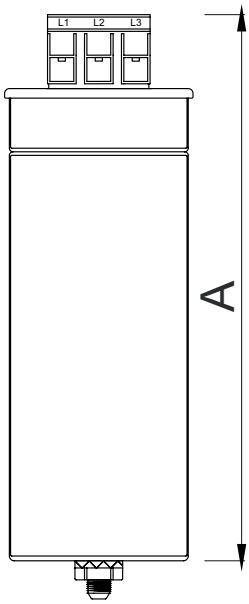

Front View

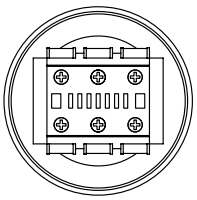
Top View

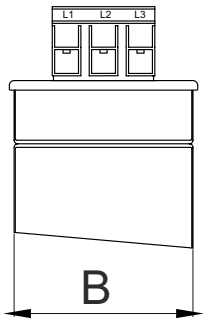

Product Name	A (mm)	B (mm)
KND T0.5	125	50
KND T1.0	125	50
KND T1.5	125	50
KND T2.5	150	50
KND T5.0	140	75
KND T7.5	195	75
KND T10.0	205	90
KND T12.5	205	90
KND T15.0	245	90
KND T18.6	245	100
KND T20.0	245	100
KND T23.2	245	117
KND T25.0	245	117
KND T30.0	245	117

Technical Features

Product Code	Product Name	Product Description	Current (A) (for 525 V)	Power kVAr 480 (V)	Power kVAr 525 (V)	Weight (kg)
GA7301	KND B5.0	5.0 kVAr 525V CAPACITOR	5,50	4,16	5,0	1,25
GA7302	KND B7.5	7.5 kVAr 525V CAPACITOR	8,25	6,25	7,5	1,25
GA7303	KND B10.0	10.0 kVAr 525V CAPACITOR	11,00	8,3	10,0	1,75
GA7304	KND B12.5	12.5 kVAr 525V CAPACITOR	13,75	10,4	12,5	1,75
GA7305	KND B15.0	15.0 kVAr 525V CAPACITOR	16,50	12,5	15,0	1,90
GA7306	KND B20.0	20.0 kVAr 525V CAPACITOR	21,99	16,7	20,0	2,85
GA7307	KND B25.0	25.0 kVAr 525V CAPACITOR	27,49	20,9	25,0	2,95
GA7308	KND B30.0	30.0 kVAr 525V CAPACITOR	32,99	25,0	30,0	2,95
GA7309	KND B40.0	40.0 kVAr 525V CAPACITOR	44,00	33,3	40,0	3,85

KND B12.5

- The service life of capacitors under normal conditions is 130.000 hours at temperature level D (55 °C), is 150.000 hours at temperature level C (50 °C)
- Capacitors must be placed vertically in the panel.
- Please contact us for different voltage ratings.

Technical Drawing

Three-phase Capacitors (525 V)

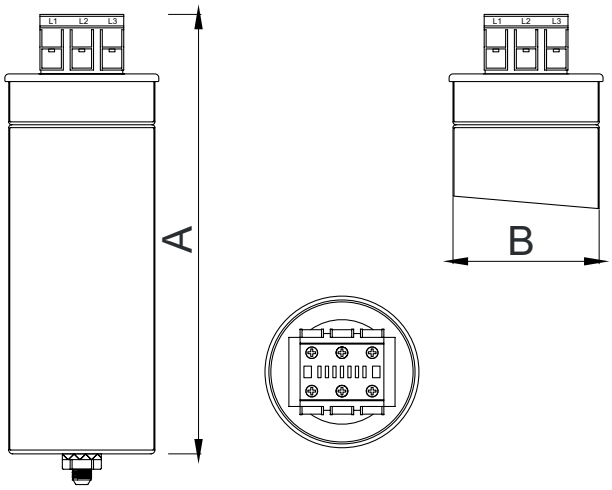

Front View Top View

Product Name	A (mm)	B (mm)
KND B5.0	140	75
KND B7.5	195	75
KND B10.0	205	85
KND B12.5	205	90
KND B15.0	245	90
KND B20.0	245	100
KND B25.0	245	117
KND B30.0	245	117
KND B40.0	243	136

Connection Diagram

Three-phase Capacitors (525 V)

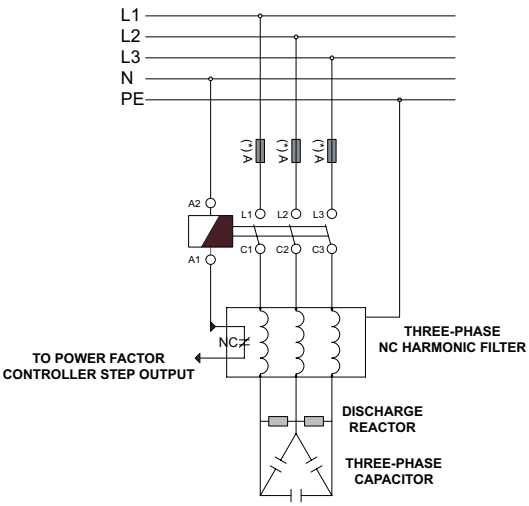

(*)For the recommended fuse current and cable cross-section, please refer to the rated operating current table in the section related to the product of your choice.

Technical Features

Product Code	Product Name	Product Description	Description	Max. Power	Max.Voltage
GA7401	DRJ R11	DISCHARGE REACTOR	It is used for the discharge of capacitors in a short time (t<5 sec) in enterprises with fast loads.	50 kVAr	480 V
GA7402	DRJ D12	DISCHARGE RESISTOR (22K)	It is used for discharging capacitors in a short time in enterprises with fast loads.	50 kVAr	480 V

- It is recommended to use the discharge reactor together with compensation contactors.
- It is recommended to use the discharge resistor together with the static contactor.

DRJ R11

Technical Drawing

Discharge Reactor

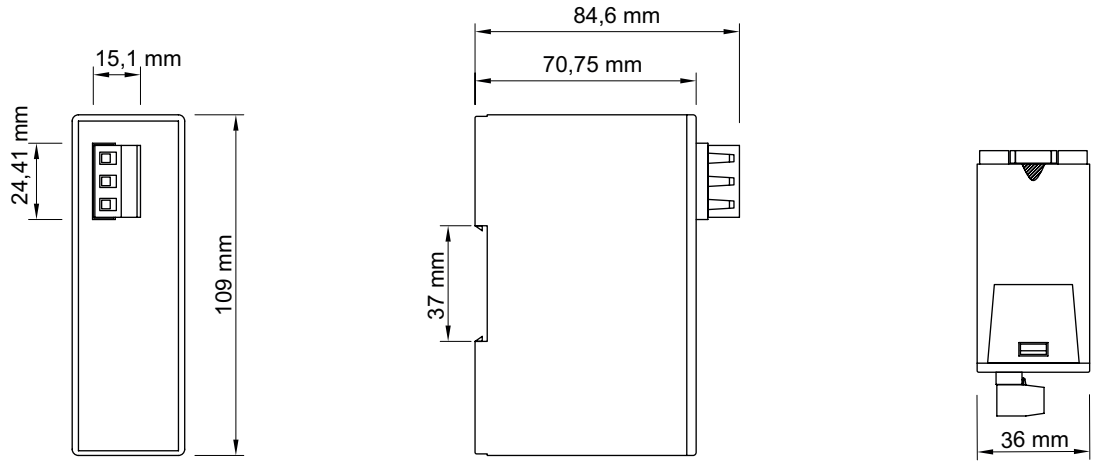

Front View Side View Top View

DRJ R12

Connection Diagram

Discharge Reactor up to 50 KVAR

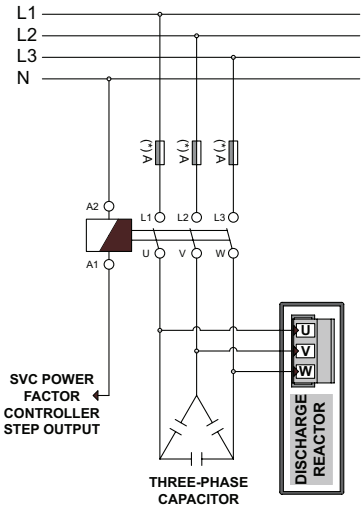

(*)For the recommended fuse current and cable cross-section, please refer to the rated operating current table in the section related to the product of your choice.

Discharge Reactor between 50 - 100 kVAr

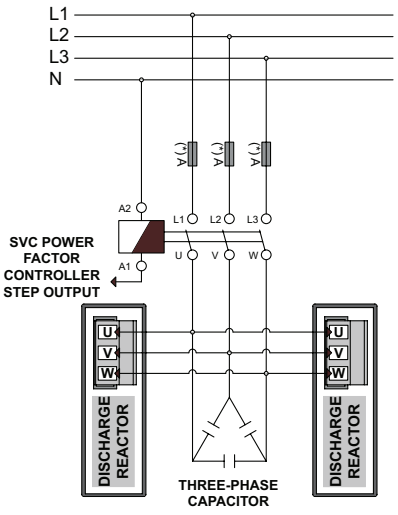

(*)For the recommended fuse current and cable cross-section, please refer to the rated operating current table in the section related to the product of your choice.

Technical Features

Product Code	Product Name	Product Description	Size	Number of Poles	Rated Operating Current In (A)	Rated Voltage (V)	Rated Insulation Voltage (V)	Breaking Capacity of Fuse (kA)	I/Ic	Weight (kg)
GA7511	YA-160	160 A LOAD BREAKERS	NH00	3	160	690	800	120	AC22B	0,7
GA7512	YA-250	250 A LOAD BREAKERS	NH1	3	250	690	800	120	AC23B	1,5

YA - 250

Technical Drawing

LOAD BREAKERS 160 A

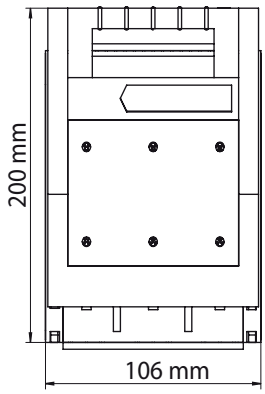

Front View

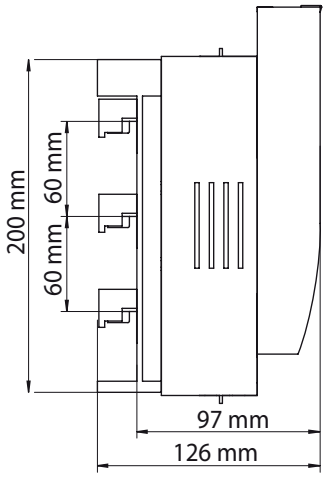

Side View

LOAD BREAKERS 250 A

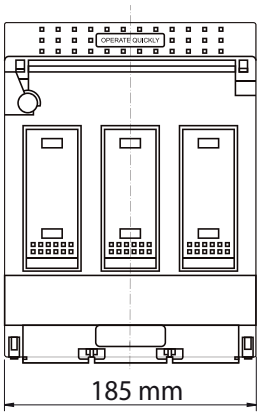

Front View

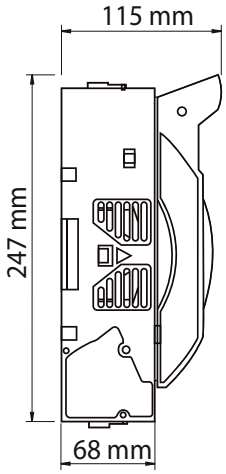

Side View

Technical Features

Product Code	Product Name	Product Description	Size	Rated Current In (A)	Breaking Capacity (kA)
GA7521	NH 16	16 A NH BLADE FUSE	NH00	16	120
GA7522	NH 25	25 A NH BLADE FUSE	NH00	25	120
GA7523	NH 32	32 A NH BLADE FUSE	NH00	32	120
GA7524	NH 50	50 A NH BLADE FUSE	NH00	50	120
GA7525	NH 63	63 A NH BLADE FUSE	NH00	63	120
GA7526	NH 80	80 A NH BLADE FUSE	NH00	80	120
GA7527	NH 100	100 A NH BLADE FUSE	NH00	100	120
GA7528	NH 125	125 A NH BLADE FUSE	NH00	125	120
GA7529	NH 160	160 A NH BLADE FUSE	NH00	160	120
GA7530	NH 250	250 A NH BLADE FUSE	NH1	250	120

NH 250

Technical Drawing

NH Blade Fuse

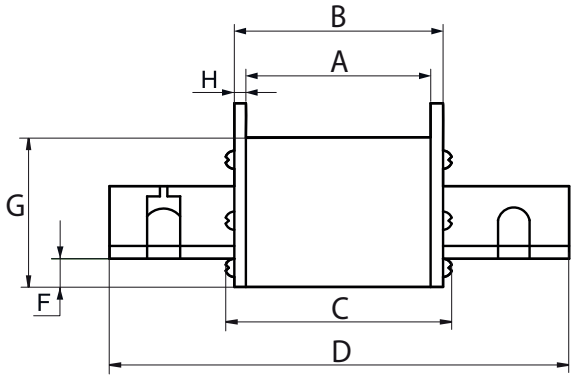

Front View

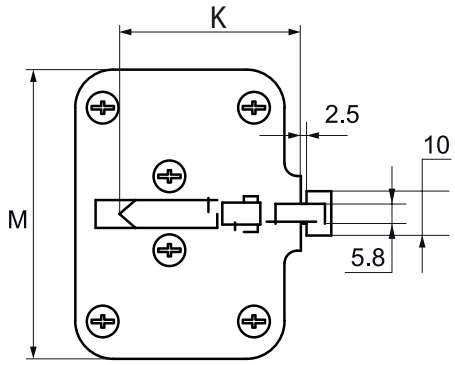

Side View

DIMENSIONS (mm)										
TYPE	A	B	C	D	E	F	G	H	K	M
NH00	47	50	54	79	15	12	45	1,5	35	29
NH1	62	66	72	135	20	11	48	2	40	48

*You can scan the QR code to visit our website.

AC/DC CLAMP METER
ZERO
80A~
4A~
80A⎓
4A⎓
Hz/%
HOLD
CAP
VΩ/AC
OFF
22.5
MODE
RANGE
Hz/%
AUTO POWER OFF
COM
VΩ Hz
CE

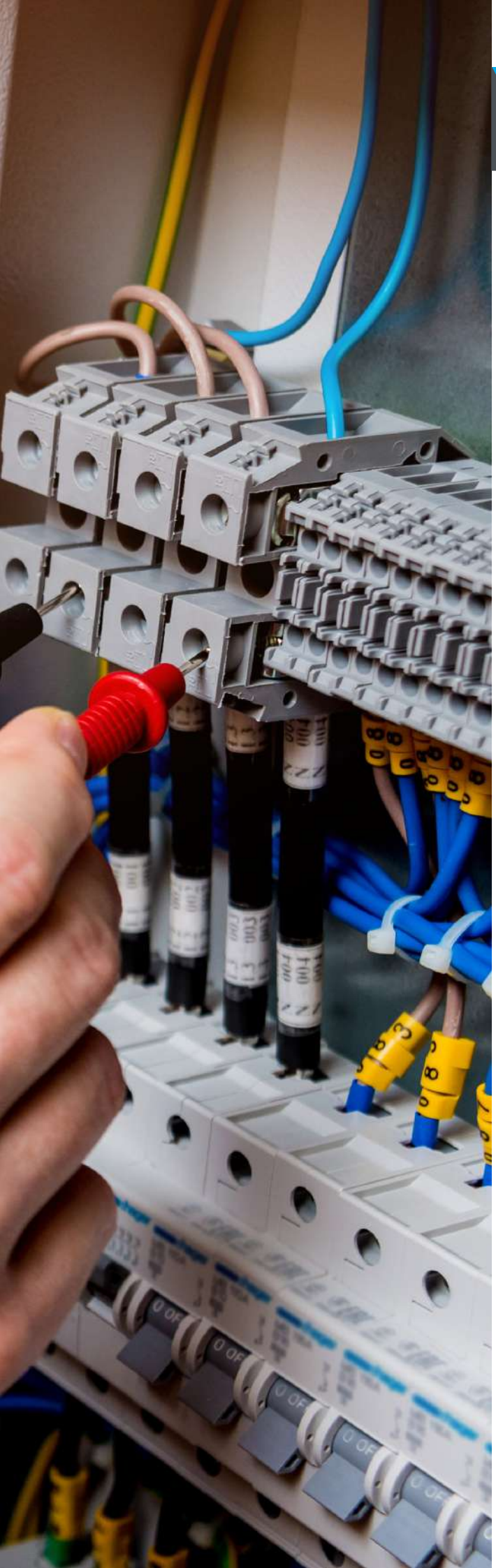

ENERGY MEASUREMENT

Network Analyzer

3 phase currents and neutral current, phase-neutral and phase-phase voltages, frequency, active and reactive powers, angle difference between current and voltage, power factor, current and voltage harmonics between 1-63 and current and voltage Total Harmonic Distortion values of each phase can be measured and monitored on the screen. In addition, it reads and records active and reactive energies. It is also possible to monitor the demand and peak values for these measured quantities on the analyzer. Many necessary adjustments related to the device (Current Transformer, Voltage Transformer etc.) can be made through the menu. In the communicated versions, all read parameters can be monitored remotely via the standard MODBUS protocol and various adjustments can be made. In the versions of our network analyzer with SD card feature, the electrical quantities selected for recording can be periodically recorded on the SD card.

Power Analyzer

3 phase current, phase-neutral and phase-phase voltages, frequency, active and reactive powers, angle difference between current and voltage, power factor values can be measured and monitored on the screen. In addition, it reads and records active and reactive energies. It is also possible to monitor the demand and peak values for these measured quantities on the analyzer. Many necessary adjustments related to the device (Current Transformer Ratio, Voltage Transformer Ratio etc.) can be made through the menu. In the communicated versions, all read parameters can be monitored remotely via the standard Modbus protocol and various adjustments can be made. In the versions with output contact, the device can output within the set value range for the quantities (Current, Voltage, Active and Reactive Power, Cos, Pf etc.) selected via the menu.

Multimeter

The multimeter measures and calculates the current and voltage values of 3 phases as True RMS. Along with these quantities, it also measures the frequency and shows the measured values on its screen. Optionally, it can also measure the earth voltage and display the measured values on the screen. Through the menu, current transformer and voltage transformer settings can be made. The versions with output feature can output according to the current and voltage value ranges set via the menu. With the new supply design, the multimeter does not require a separate supply input. If there is energy in any voltage phase (85-265 Volts), the device can operate.

Voltmeter

They are devices which are produced in order to measure and continuously monitor the AC voltage values of three phases. It is connected to the circuit in parallel.

Ammeter

They are devices produced for the purpose of measuring and monitoring the AC current drawn by loads. It is connected to the circuit in series.

Analyzers	52
Multimeters	55
Voltmeters	56
Ammeters	57
XLPE Cable Type Current Transformers	58
LV Current Transformers	60

Key Features

- It is microprocessor based.
- **Phase to Phase, Line Voltage:** It can be
- adjusted in the range of 173-46000 V
- **Current Transformer Ratio:** It can be adjusted between 5/5 and 10000/5
- **Output:** 1 digital output with optocoupler.
- **Communication Protocol:** RS-485 Standard Modbus RTU.
- **Connection:** Supports RS-485 connection.
- **Compatibility:** Optionally compatible with CT30 type current transformer.
- **Power Consumption of Measurement Inputs:** <1 VA
- **Voltage Measurement Range:** 22-725 V AC (45-55 Hz)
- **Minimum Measurement Value:** 1mA / 2 V stop.
- **Measurement Sensitivity:** 1mA / 0.1 V
- **Protection Class:** IP20 protection class.
- **Measurement of Current and Voltage**
- **Harmonics:** Between 1-63
- It periodically saves the peak values of all parameters in its memory.
- Energy values are periodically saved in the permanent memory, even if the power is cut off, the device continues to save energy values from where it left off when the device is turned on again.
- Energy, demand and peak values of all parameters can be reset from the menu.
- The device can save the measured quantities to the SD card for up to 250 hours with a period adjustable between 500 ms - 25 s

ANL 21

Technical Features

Product Code	Product Name	Product Description	CT30	X/5 A	RS-485 Communication	TFT Screen	Digital Input	Digital Output	Internal Memory Input (Max: 256 GB)	USB Input	Harmonic Measurement
GA4121	ANL 21	DIGITAL OUTPUT NETWORK ANALYZER		✓	✓	✓	2	1	✓	✓	63
GA4122	ANL 22	DIGITAL OUTPUT NETWORK ANALYZER (CT30 AT)	✓		✓	✓	2	1	✓	✓	63

Technical Drawing

Digital Output Network Analyzer

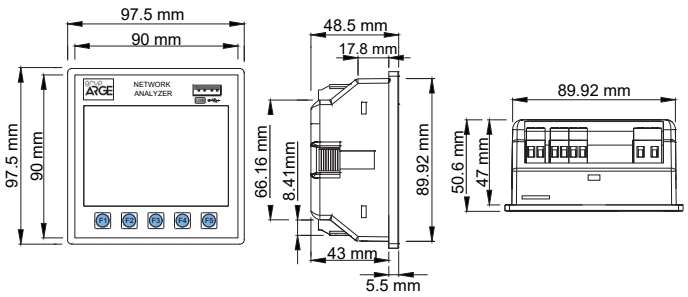

Front View Side View Top View

Connection Diagram

Digital Output Network Analyzer

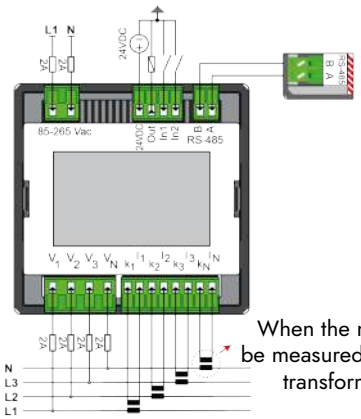

When the neutral current is to be measured, an optional current transformer can be used.

Key Features

• It is microprocessor based.
• **Phase to Phase, Line Voltage:** It can be adjusted in the range of 190-36200 V
• **Current Transformer Ratio:** It can be adjusted between 5/5 and 10000/5
• **Output:** Optionally, it has 2 pieces 5 A relay outputs.
• **Communication Protocol:** RS-485 Standard Modbus RTU
• **Connection:** Supports RS-485 connection.
• **Compatibility:** Optionally compatible with CT30 type current transformer.
• **Power Consumption of Measurement Inputs:** <1 VA
• **Power Consumption:** Less than 10.5 VA in relayoutput model and less than 9 VA in normal model.
• **Voltage Measurement Range Phase-Neutral:** 10-280 V AC, 45-55 Hz, phase-phase; 10-480 V AC, 45-55 Hz.
• **Minimum Measurement Value:** 2mA / 10 V.
• **Measurement Accuracy:** 1%
• **Protection Class:** IP20 protection class.
• It periodically saves the peak values of all parameters in permanent memory.
• Energy values are periodically saved in permanent memory, even if the power is cut off, the device continues to save energy values from where it left off when the device is turned on again.
• Energy, demand and peak values of all parameters can be reset from the menu.

ANL 11

Technical Features

Product Code	Product Name	Product Description	CT30	X/5 A	RS-485 Communication	7-Segment Screen	Relay Output
GA4111	ANL 11	POWER ANALYZER		✓		✓	
GA4112	ANL 12	POWER ANALYZER (30 AT)	✓			✓	
GA4113	ANL 13	COMMUNICATION POWER ANALYZER		✓	✓	✓	
GA4114	ANL 14	COMMUNICATION POWER ANALYZER (CT30 AT)	✓		✓	✓	
GA4115	ANL 15	COMMUNICATION POWER ANALYZER WITH RELAY OUTPUT		✓	✓	✓	2
GA4116	ANL 16	COMMUNICATION POWER ANALYZER WITH RELAY OUTPUT (CT30 AT)	✓		✓	✓	2

Technical Drawing

Power Analyzer

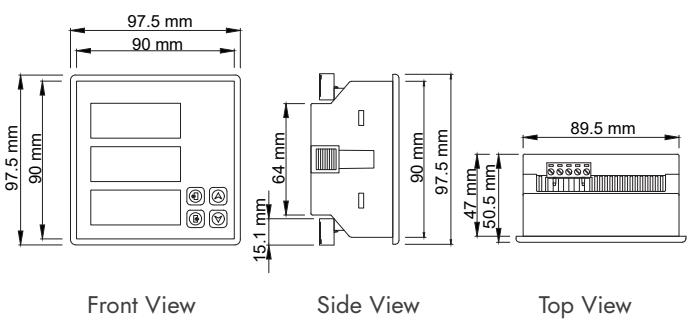

Connection Diagram

Power Analyzer

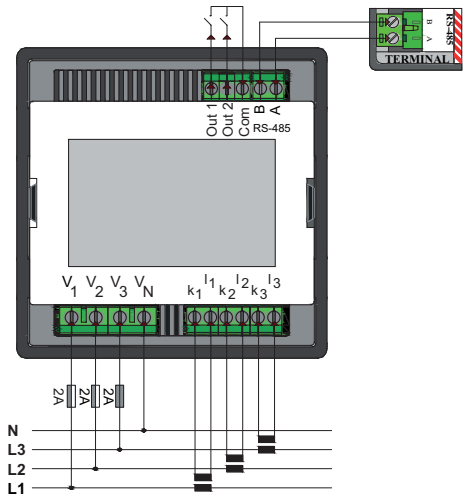

Key Features

• It is microprocessor based.
•**Phase-to-Phase, Line Voltage:** It can be adjusted in the range of 190-36200 V
• **Current Transformer Ratio:** Adjustable between 5/5 and 10000/5
• **Mounting:** Suitable for in-panel rail mounting.
• **Communication Protocol:** RS-485 Standard Modbus RTU.
• **Connection:** Supports RS-485 connection.
• **Compatibility:** Optionally compatible with CT30 type current transformer.
• **LED Status:** It has LEDs indicating power, RS-485, L1-L2-L3 and error status.
• **Operating Voltage:** 180-230 V AC
• **Power Consumption:** <2.5 VA
• **Power Consumption of Measurement Inputs:** <1 VA
• **Minimum Measurement Value:** 2mA / 10 V
• **Voltage Measurement Range Phase-Neutral:** 10-280 V AC, 45-55 Hz, phase-phase; 10-485 V AC, 45-55 Hz
• **Measurement Sensitivity:** 1%
• It periodically saves the peak values of all parameters in its memory.
• It has 3 different modes as automatic, manual and reverse to adjust the polarity direction of current transformers.
• Energy values are periodically saved in the permanent memory, even if the power is cut off, the device continues to save energy values from where it left off when it is turned on again.
• Demand values are periodically recorded in the permanent memory. Demand values are not lost when the energy is cut off.

ANL 31

Technical Features

Product Code	Product Name	Product Description	CT30	X/5 A	RS-485 Communication
GA4131	ANL 31	RAIL TYPE POWER ANALYZER		✓	✓
GA4132	ANL 32	RAIL TYPE POWER ANALYZER (CT30 AT)	✓		✓

Technical Drawing

Rail Type Power Analyzer

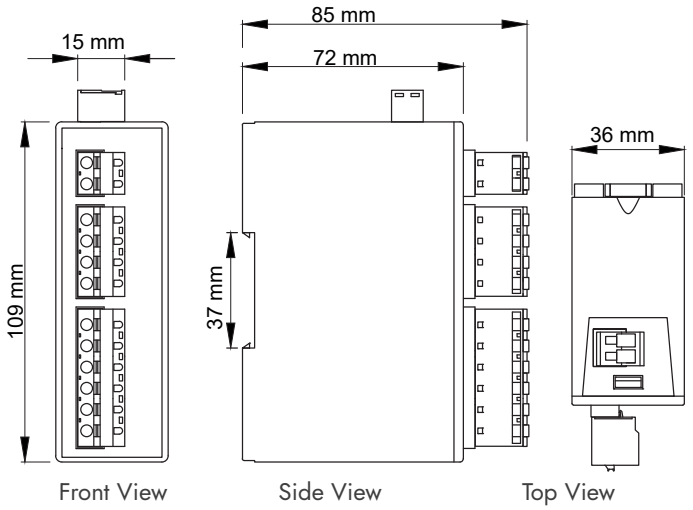

Connection Diagram

Rail Type Power Analyzer

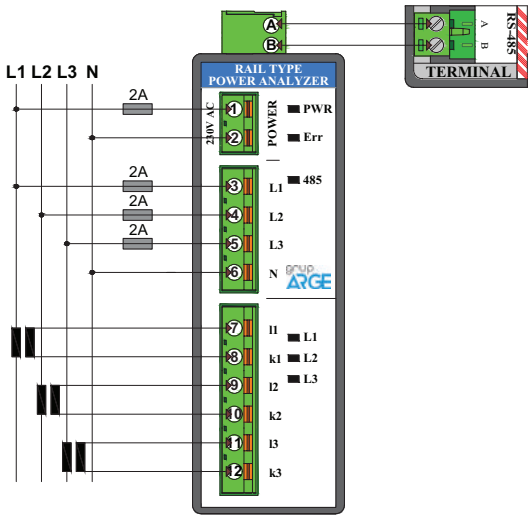

Key Features

- It is microprocessor based.
- **Phase to Phase, Line Voltage:** It can be adjusted in the range of 190-36200 V
- **Current Transformer Ratio:** It can be adjusted between 5/5 and 10000/5
- **Output:** It has 2 pieces 5 A relay outputs optionally.
- **Compatibility:** Optionally compatible with CT30 type current transformer.
- **Operating Voltage:** 180-265 V AC
- **Operating Frequency:** 45-65 Hz
- **Power Consumption of Measurement Inputs:** <1 VA
- **Minimum Measurement Values:** 25mA / 10 V stop.
- **Measurement Accuracy:** 1%
- **Screen:** There are 3 pieces 4-digit 7-segment displays.
- **Voltage Measurement Range Phase-Neutral:** 10-280 V AC, 45-65 Hz, phase-phase; 480 V AC, 45-65 Hz
- **Measurement:** It can measure phase-phase and phase-neutral voltages, current and frequency of three phases.
- **Power Consumption:** Less than 8.5 VA in relay output model and less than 7 VA in normal model.
- **Polarity Direction Adjustment:** Current transformers have 3 different modes as automatic, manual and reverse to adjust the polarity direction.
- **Protection Class:** IP20

MTM 13

Technical Features

Product Code	Product Name	Product Description	CT30	X/5 A	3*V / 3*VL-L	3 * I	Neutral-Earth Voltage	85-265 V AC	Frequency	Voltage-Current-Frequency Averages	Output Control (2 pieces)	7-Segment Screen
GA4211	MTM 11	MULTIMETER		✓	✓	✓		✓	✓	✓		✓
GA4212	MTM 12	MULTIMETER (CT30 AT)	✓		✓	✓		✓	✓	✓		✓
GA4213	MTM 13	MULTIMETER W/ RELAY OUTPUT		✓	✓	✓	✓	✓	✓	✓	✓	✓
GA4214	MTM 14	MULTIMETER W/ RELAY OUTPUT (CT30 AT)	✓		✓	✓	✓	✓	✓	✓	✓	✓

Technical Drawing

Multimeter

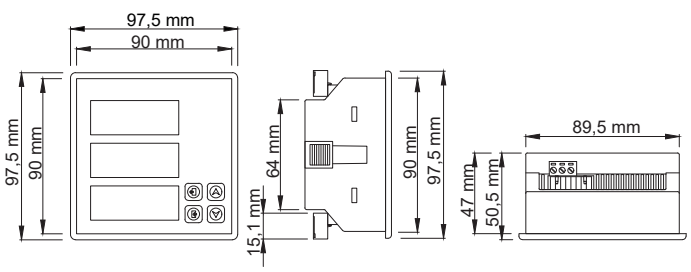

Front View Side View Top View

Connection Diagram

Multimeter

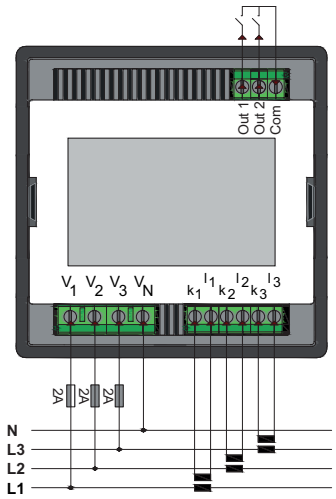

Key Features

- It is microprocessor based.
- **Measurement:** It can measure the phase-neutral voltage of one phase.
- **Output:** It has 1 piece 5 A relay output optionally.
- **Operating Voltage:** 85-265 V AC
- **Operarelayting Frequency:** 45-65 Hz
- **Power Consumption:** Less than 7 VA in set model and less than 5 VA in normal model.
- **Power Consumption of Measurement Inputs:** <1 VA
- **Voltage Measurement Range Phase-Neutral:** 10-280 V AC, 45-65 Hz
- **Measurement Accuracy:** 1%
- **Protection Class:** IP20
- **Screen:** There is 1 piece, 4-digit 7-segment display.
- **Operating Ambient Temperature:** -10 ˚C - +55 ˚C

Technical Features

Product Code	Product Name	Product Description	Measuring Range 0-265V AC	Panel Type	Screen	Screen Digit	85-265 V AC	1 Phase Measurement	Set
GA4311	VTM 11	VOLTMETER	✓	✓	1	4	✓	✓	
GA4312	VTM 12	SET VOLTMETER	✓	✓	1	4	✓	✓	✓

Technical Drawing

Voltmeter

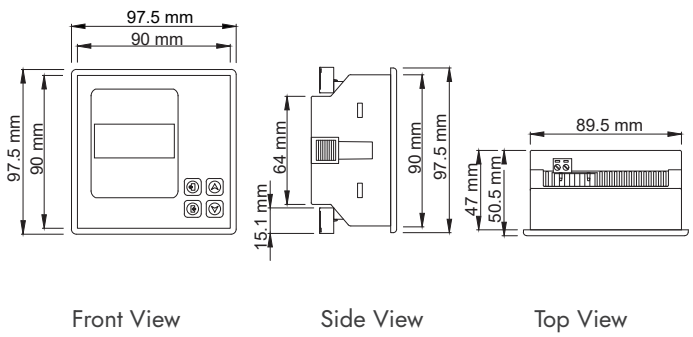

Connection Diagram

Voltmeter

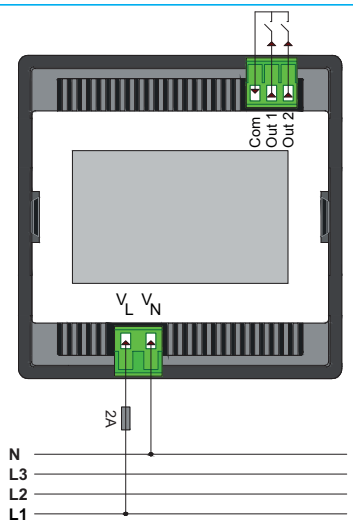

Key Features

- It is microprocessor based.
- **Current Transformer Ratio:** Adjustable between 5/5 and 10000/5
- **Output:** Optionally has 1 piece 5 A relay output.
- **Compatibility:** Optionally compatible with CT30 type current transformer.
- **Operating Voltage:** 85-265 V AC
- **Operating Frequency:** 45-65 Hz
- **Power Consumption of Measurement Inputs:** <1 VA
- **Minimum Measurement Values:** 25mA
- **Measurement Accuracy:** 1%
- **Protection Class:** IP20
- **Screen:** There is 1 piece, 4 digits 7-segment display.
- **Operating Ambient Temperature:** -10 ˚C - +55˚C
- **Measurement:** It can measure the current of one phase.
- **Power Consumption:** Less than 7 VA in relay output model and less than 5 VA in normal model.
- Separate input current limit values can be entered for X/5 A and CT 30 type current transformers.

Technical Features

Product Code	Product Name	Product Description	CT30	X/5 A	Panel Taype	Screen	Screen Digit	85-265 V AC	1 Phase Measurement	Set
GA4411	APM 11	AMMETER		✓	✓	1	4	✓	✓	
GA4412	APM 12	AMMETER (CT30 AT)	✓		✓	1	4	✓	✓	
GA4413	APM 13	SET AMMETER		✓	✓	1	4	✓	✓	✓
GA4414	APM 14	SET AMMETER (CT30 AT)	✓		✓	1	4	✓	✓	✓

Technical Drawing

Ammeter

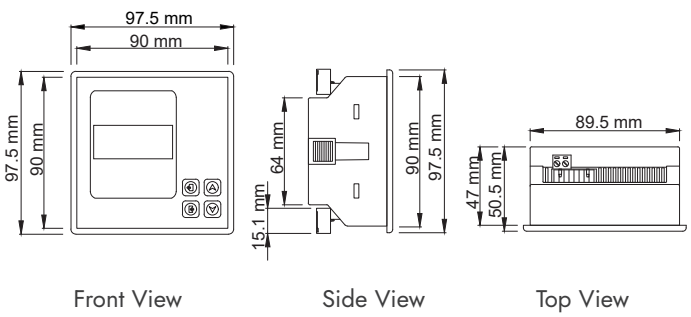

Connection Diagram

Ammeter

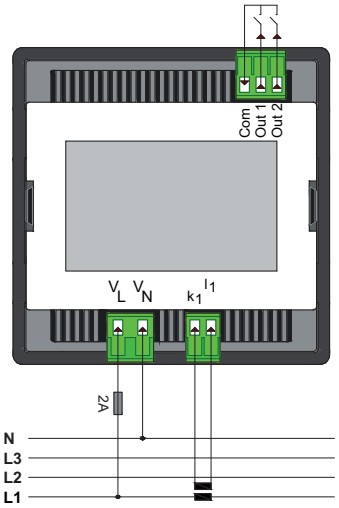

Technical Features

Product Code	Product Name	Product Description	Hole size	VA	Primary Current (A)	Secondary Akım (A)
GA6911	OAT 11	OG TOROID CURRENT TRANSFORMER (40/1)	68 mm	1,25	40	1
GA6912	OAT 12	OG TOROID CURRENT TRANSFORMER (100/5)	68 mm	5	100	5

It is only used together with our MV-referenced power factor controllers. It is definitely not connected to MV busbars, it is connected to XLPE cables. 40/1 up to 2500kVA; 100/5 XLPE cable type current transformer between 2500-6000kVA is used. please ask a price for special transformers such as 200/5 and 300/5.

OAT 11

Technical Drawing

XLPE Cable Type Current Transformer

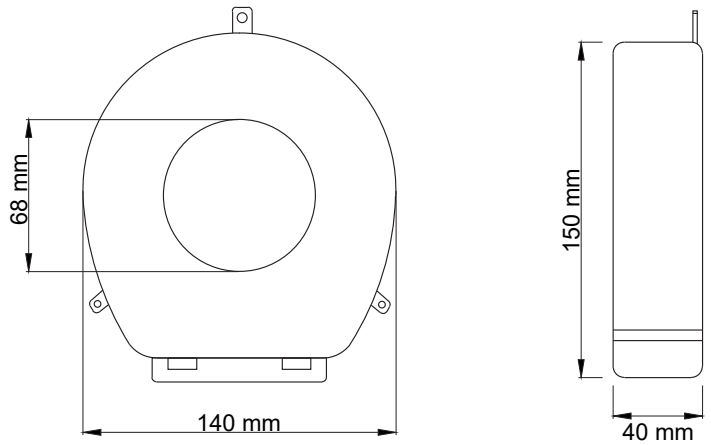

Front View

Side View

Connection Diagram

XLPE Cable Type Current Transformer Connection Type

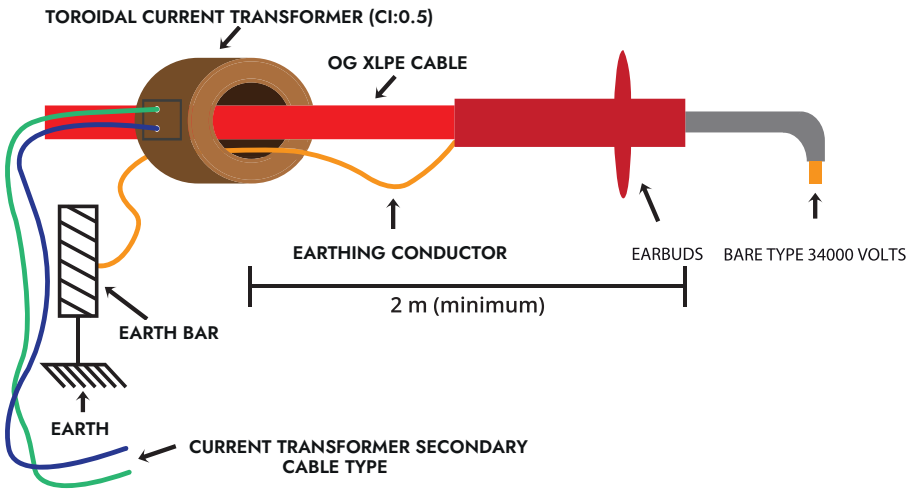

WARNING: The input phases of the driver and power factor controllers must be in the same order. In other words, L1 phase of the power factor controller and L1 phase of the driver, L2 phase of the power factor controller and L2 phase of the driver, L3 phase of the power factor controller and L3 phase of the driver must be the same. The driver must be controlled with TRG1-2-3

Connection Types Between Current Transformer and Earthing Cables

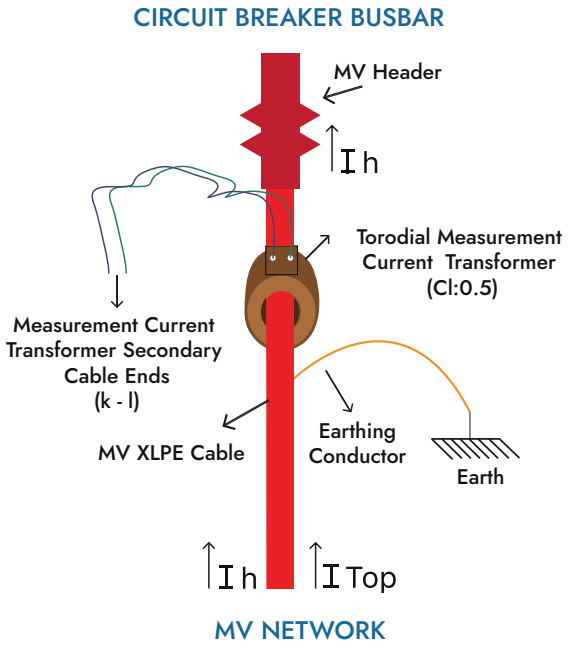

1.Case

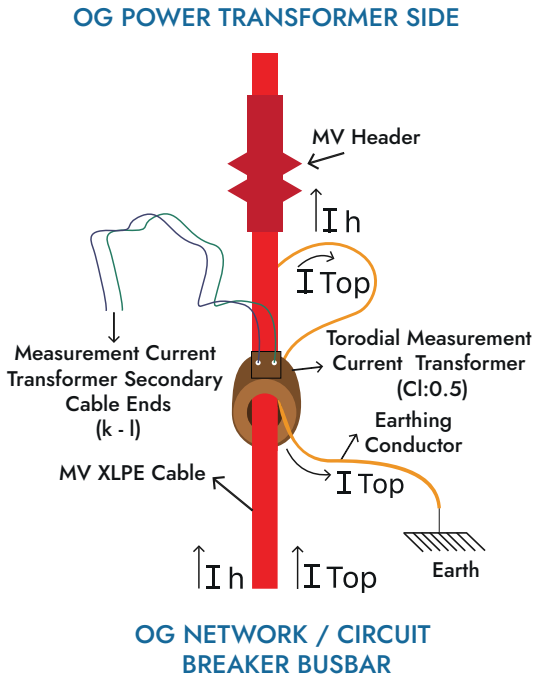

2.Case

1.Case: Earthing Is Done On The Circuit Breaker Side

2.Case: Earthing On The Power Transformer Side

Cross Sections of Cables for XLPE Cable Type Current Transformers (mm²)

The selection of current transformers that can be used according to the power capacities for SVC MV power factor controllers and cable cross-section - length dimensions are as in the table. (The cross-section values in the table are based on 34.5 kV voltage value).

Current Transformer	Transformer Power (kVA)	Distance Between Current Transformer and Power Factor Controller (m)				
		20	40	60	80	100
40/1	630	2,5	2,5	2,5	4	4
	1000	2,5	2,5	4	4	4
	1250	2,5	4	4	6	6
	1600	2,5	4	6	6	10
	2000	4	6	6	10	10
	2500	4	6	10	10	10
100/5	630	2,5	2,5	2,5	4	4
	1000	2,5	2,5	4	4	4
	1250	2,5	4	4	6	6
	1600	2,5	4	6	6	10
	2000	4	6	6	10	10
	2500	4	6	10	10	10

Technical Features

GA.30S LV Current Transformers (Mini)

Product Model	Primary Current (A) / Secondary Current (A) Product Code				Rated Power (VA)	Class
GA.30S	75/5 GA6001	100/5 GA6002	125/5 GA6003	150/5 GA6004	1,5	1
	200/5 GA6005				2,5	1
	250/5 GA6006	300/5 GA6007	400/5 GA6008	600/5 GA6009	5	0,5

GA.30S

GA.30M LV Current Transformers (Mini)

Product Model	Primary Current (A) / Secondary Current (A) Product Code						Sealed	Rated Power (VA)	Class
GA.30M (30 x 10)	30/5 GA6101	40/5 GA6102	50/5 GA6103	60/5 GA6104	75/5 GA6105	80/5 GA6106		1,5	1
	100/5 GA6107	125/5 GA6108						1,5	0,5
	100/5 GA6109	125/5 GA6110						2,5	1
	150/5 GA6111	200/5 GA6112						2,5	0,5
	250/5 GA6113	300/5 GA6114	400/5 GA6115	500/5 GA6116	600/5 GA6117			5	0,5
	300/5 GA6118	400/5 GA6119	500/5 GA6120	600/5 GA6121				10	0,5
	300/5 GA6122	400/5 GA6123	500/5 GA6124	600/5 GA6125			✓	10	0,5
	100/5 GA6126						✓	1,5	0,5
	150/5 GA6127						✓	2,5	0,5
	GA6151	AT RAY	Rail Mounting Apparatus						

GA.30M

Technical Drawing

GA.30S LV Current Transformers (Mini)

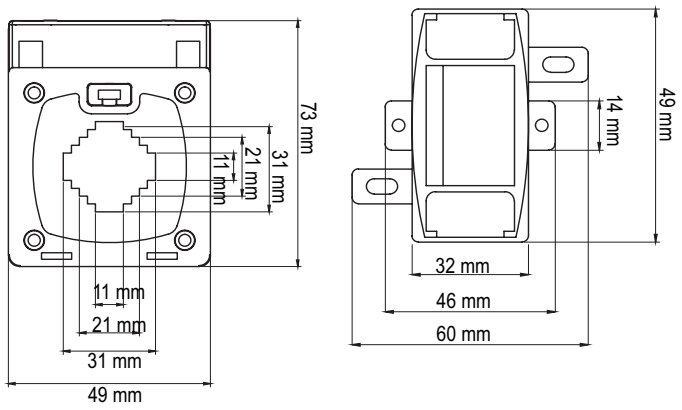

GA.30M LV Current Transformers (Mini)

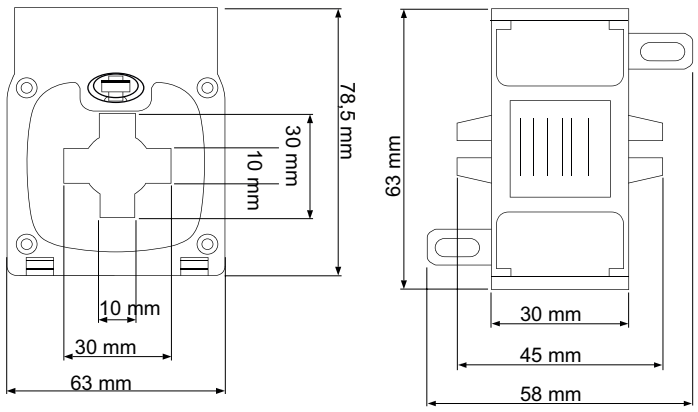

Technical Features

GA.B LV Current Transformers (Busbar)

Product Model	Primary Current (A) / Secondary Current (A) Product Code								Sealed	Rated Power (VA)	Class
GA.B (Baralı)	5/5 GA6201	10/5 GA6202	15/5 GA6203	20/5 GA6204	25/5 GA6205	30/5 GA6206	40/5 GA6207	50/5 GA6208		5	0,5
	60/5 GA6209	75/5 GA6210	80/5 GA6211	100/5 GA6212	125/5 GA6213	150/5 GA6214				5	0,5
	5/5 GA6215	10/5 GA6216	15/5 GA6217	20/5 GA6218	25/5 GA6219	30/5 GA6220	40/5 GA6221	50/5 GA6222		10	0,5
	60/5 GA6223	75/5 GA6224	80/5 GA6225	100/5 GA6226	125/5 GA6227	150/5 GA6228				10	0,5
	30/5 GA6229	40/5 GA6230	50/5 GA6231	60/5 GA6232	75/5 GA6233	80/5 GA6234	100/5 GA6235	125/5 GA6236	✓	10	0,5
	150/5 GA6237								✓	10	0,5

GA.B AG

Technical Features

GA.30 LV Current Transformers

Product Model	Primary Current (A) / Secondary Current (A) Product Code								Sealed	Rated Power (VA)	Class
GA.30 (30 x 10)	20/5 GA6301	25/5 GA6302	30/5 GA6303	40/5 GA6304	50/5 GA6305	60/5 GA6306	75/5 GA6307	80/5 GA6308		5	1
	100/5 GA6309	125/5 GA6310	150/5 GA6311							5	1
	250/5 GA6312	300/5 GA6313								5	0,5
	250/5 GA6314	300/5 GA6315								10	0,5
	250/5 GA6316	300/5 GA6317							✓	10	0,5

GA.30

Technical Drawing

GA.B LV Current Transformers (Busbar)

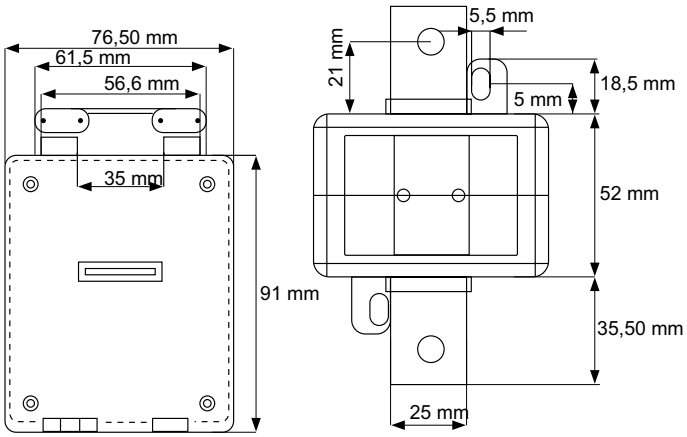

GA.30 LV Current Transformers

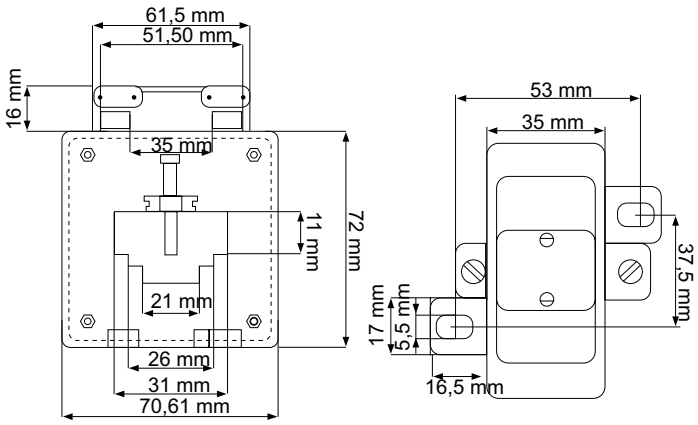

Technical Features

GA.30D LV Current Transformers

Product Model	Primary Current (A) / Secondary Current (A) Product Code	Sealed	Rated Power (VA)	Class
GA.30D (30 x 10)	200/5 GA6318		5	0,5
	200/5 GA6319		10	0,5
	200/5 GA6320	✓	10	0,5

GA.30D

GA.40 LV Current Transformers

Product Model	Primary Current (A) / Secondary Current (A) Product Code				Sealed	Rated Power (VA)	Class
GA.40 (40 x 10)	300/5 GA6401	400/5 GA6402	500/5 GA6403	600/5 GA6404		5	0,5
	300/5 GA6405	400/5 GA6406	500/5 GA6407	600/5 GA6408		10	0,5
	400/5 GA6409	500/5 GA6410	600/5 GA6411		✓	10	0,5

GA.40

Technical Drawing

GA.30D LV Current Transformers

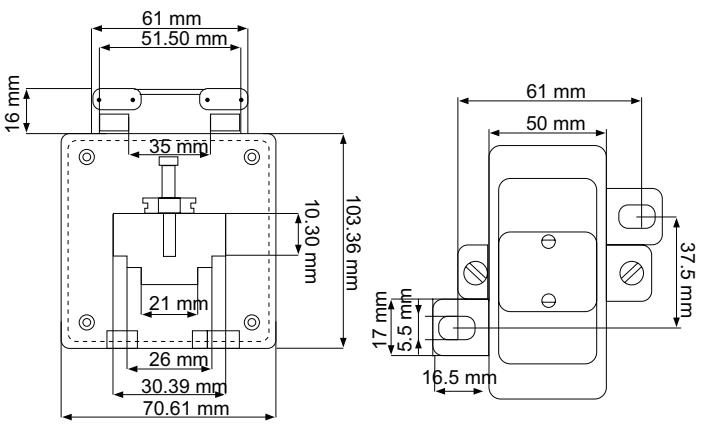

GA.40 LV Current Transformers

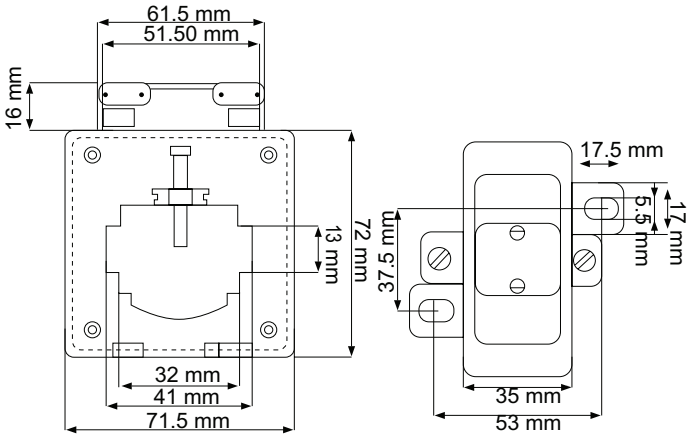

Technical Features

GA.60 LV Current Transformers

Product Model	Primary Current (A) / Secondary Current (A) Product Code						Sealed	Rated Power (VA)	Class
GA.60 (60 x 10)	700/5 GA6500	750/5 GA6501	800/5 GA6502	1000/5 GA6503	1200/5 GA6504	1250/5 GA6505		10	0,5
	750/5 GA6506	800/5 GA6507	1000/5 GA6508	1200/5 GA6509	1250/5 GA6510			15	0,5
	700/5 GA6511	750/5 GA6512	800/5 GA6513	1000/5 GA6514	1200/5 GA6515	1250/5 GA6516	✓	10	0,5

GA.60

GA.60DAR LV Current Transformers

Product Model	Primary Current (A) / Secondary Current (A) Product Code				Rated Power (VA)	Class
GA.60 DAR	400/5 GA6517	600/5 GA6518	750/5 GA6519	1000/5 GA6520	10	0,5
	1250/5 GA6521	1600/5 GA6522	2000/5 GA6523		15	0,5

GA.60DAR

Technical Drawing

GA.60 LV Current Transformers

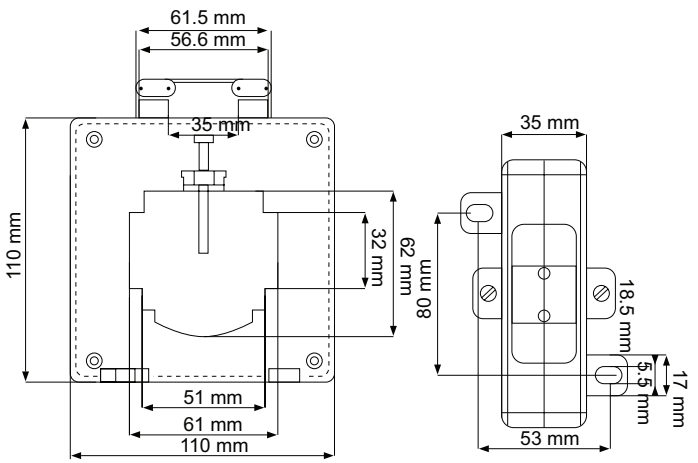

GA.60DAR LV Current Transformers

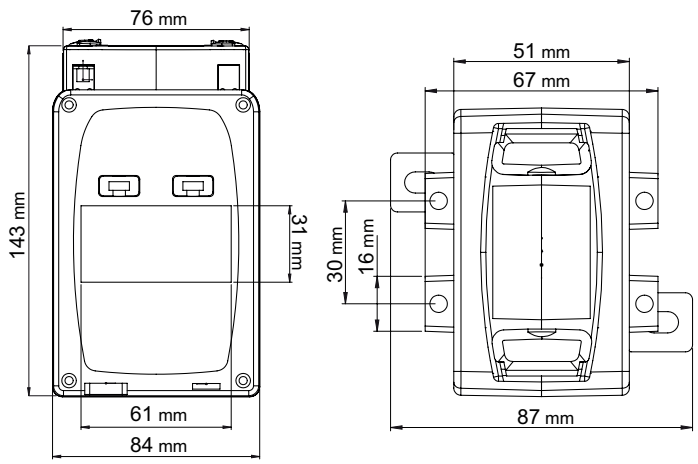

Technical Features

GA.80 LV Current Transformers

Product Model	Primary Current (A) / Secondary Current (A) Product Code		Sealed	Rated Power (VA)	Class
GA.80 (80 x 10)	1500/5 GA6601	1600/5 GA6602		15	0,5
	1500/5 GA6603	1600/5 GA6604		30	0,5
	1500/5 GA6605	1600/5 GA6606	✓	15	0,5

GA.80

GA.100 LV Current Transformers

Product Model	Primary Current (A) / Secondary Current (A) Product Code						Sealed	Rated Power (VA)	Class
GA.100 (100 x 10)	2000/5 GA6701	2500/5 GA6702	3000/5 GA6703	3200/5 GA6704				15	0,5
	2000/5 GA6705	2500/5 GA6706	3000/5 GA6707	3200/5 GA6708	4000/5 GA6709	5000/5 GA6710		30	0,5
	2000/5 GA6711	2500/5 GA6712	3000/5 GA6713	3200/5 GA6714			✓	15	0,5
	4000/5 GA6715						✓	30	0,5

GA.100

Technical Features

GA.80 LV Current Transformers

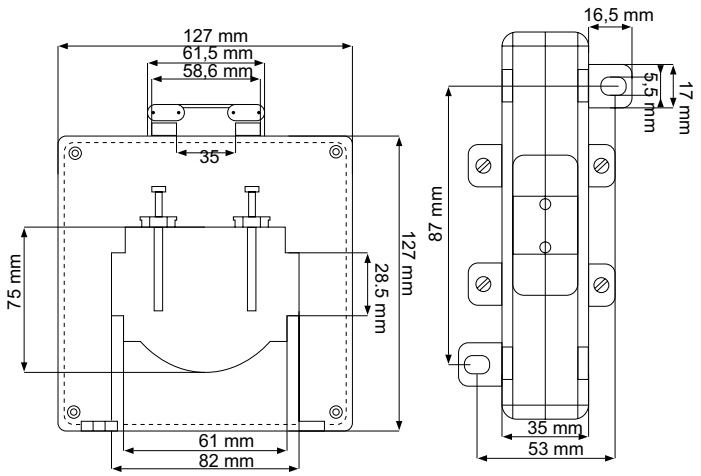

GA.100 LV Current Transformers

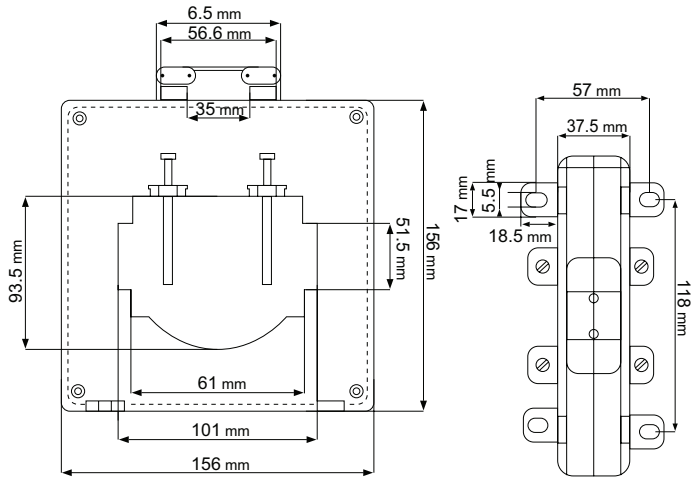

Technical Features

GA.100DAR LV Current Transformers

Product Model	Primary Current (A) / Secondary Current (A) Product Code					Rated Power (VA)	Class
GA.100 DAR	1000/5 GA6716	1250/5 GA6717				10	0,5
	1600/5 GA6718	2000/5 GA6719	2500/5 GA6720	3000/5 GA6721	3200/5 GA6722	15	0,5
	4000/5 GA6723					30	0,5

GA.100DAR

CT 30 Current Transformers

Product Code	Product Name	Product Description
GA6921	AT CT30	CT30 (120 A) CURRENT TRANSFORMER

AT CT30

Technical Drawing

GA.100DAR LV Current Transformers

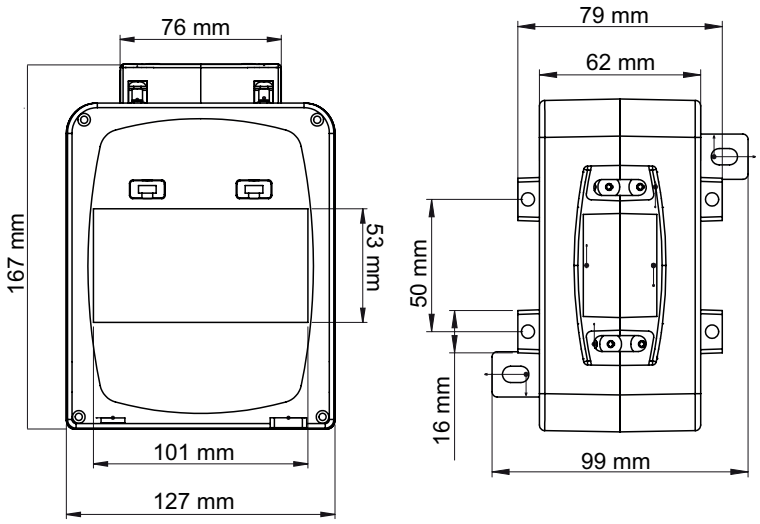

CT 30 Current Transformers

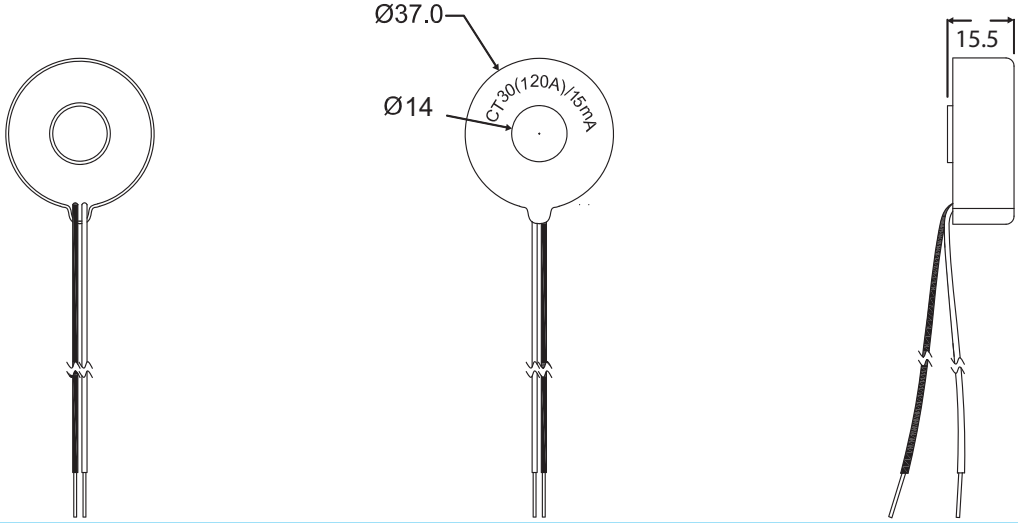

İlk Veri Zamanı
27/05/2014
Son Veri Zamanı
10/11/2015
Çarpan
1260
Günlük Tüketim
Saatlik Tüketim
Tüketim Takvimi
Reaktif Oranlar
Güç
kW·h
TL
kg (CO2)
Saatlik Aktif Tüketim Grafiği
Aktif Tüketim (kW·h)
www.enerjitakibi.com

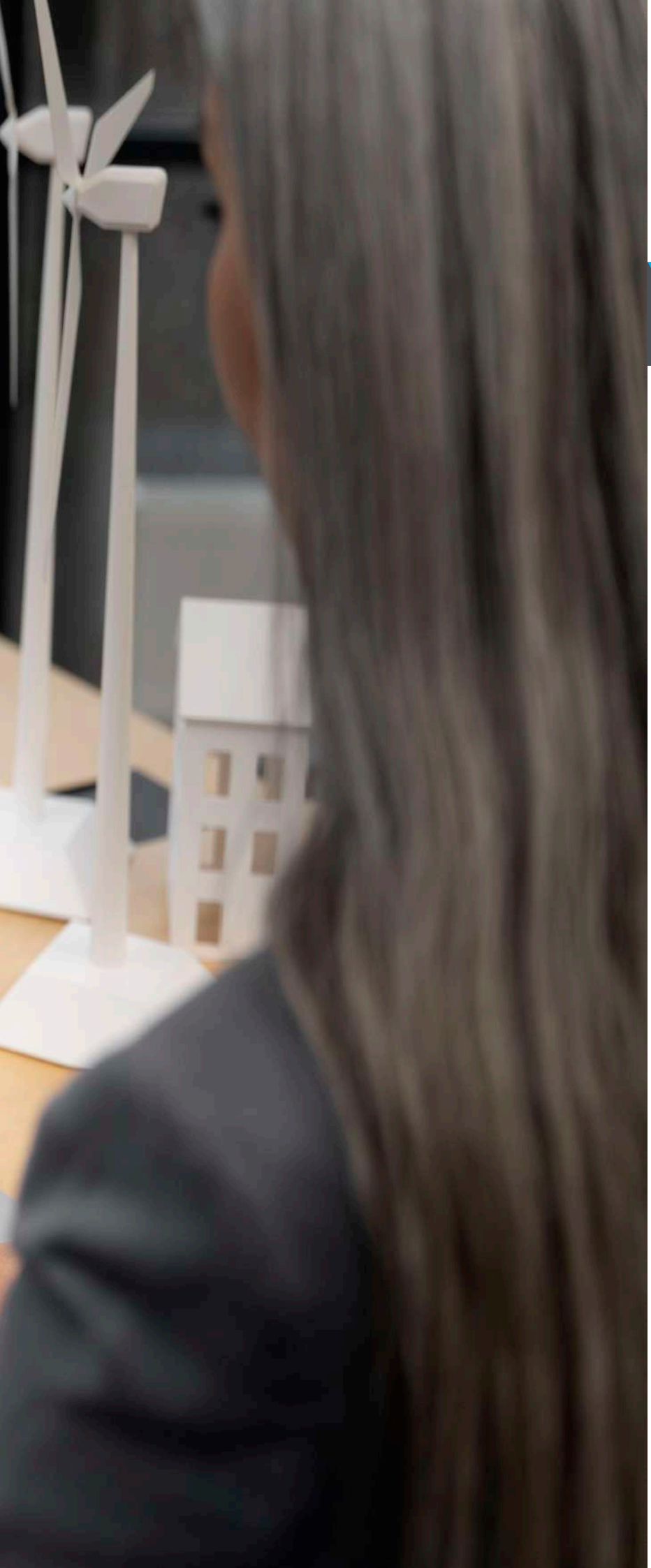

ENERGY MANAGEMENT AND AUTOMATION

It is a web-based system that is designed to monitor the energy consumption of enterprises and to remotely manage the devices that are suitable for the structure, and its content is growing and developing day by day.
SmartPOWER® energy management systems use GPRS or Ethernet communication infrastructure to communicate and control energy-consuming machines with auxiliary elements. According to the defined rules, the operation of the devices can be intervened. **SmartPOWER®** energy management systems can be used online via www.enerjitakibi.com web address or server software installed on the enterprise's own server, or they can be operated with software that is installed on local computers.

How does the system work?

The device that is desired to be monitored and controlled is connected to the appropriate GSM, GSM AUTOMATION and ETHERNET terminals and the data is sent to the central server. The user does not need to install any program. With any device connected to the Internet (such as a computer, smartphone, tablet), the user can enter their username (their own e-mail address) and password to www.enerjitakibi.com and view the devices defined in their account on the screen. Thanks to user authorization levels, the same enterprise can be monitored by different people with different authorization levels. If you want to control the machines, this is made possible by using input and output modules and sensors.

GSM and 4G Communication Terminals 68
Ethernet Terminals 70
GSM and 4G Automation Terminals 72
Additional Connection Products 74
Monitoring Software 75
Automation Modules 82

Key Features

- It is microprocessor based.
- **Supply:** HT G13 GSM Terminal and HT G16 4G Terminal works with 85-265 V AC and 9-24 V DC supply. HT G11, HT G14 GSM Terminal and HT G17 4G Terminal works with 85-265 V AC supply. HT G12 GSM Terminal is powered by 10-30 V DC supply works.
- **Communication Channel:** RS-485, RS-232 and optical supports port communication channels.
- **Modbus Device Quantity:** 32 meters or 247 Modbus devices can be read via RS-485. One meter can be read via optical reader and RS-232
- **Protocol:** TS EN 62056-21 protocol. It can communicate with all meters that support it.
- **System Architecture:** It has a system architecture that does not require static IP
- **LED Status:** RS-485/Optical/RS-232 (Communication), GSM connection and internetstatus LEDs.
- **Data Sending Period:** It can be adjusted between 1 minute and 240 minutes.
- **Compatibility:** It has wired GSM antenna support for places where GSM network signal is weak.
- **GSM Operator Compatibility:** It works compatible with M2M data lines of all GSM operators.
- **Operating Ambient Temperature:** It can operate at ambient temperatures between -10 ˚C and +55 ˚C
- **Supply Consumption Power:** <1 VA.
- **Protection Class:** It has IP40 protection class.

HT G16

Technical Features

Product Code	Product Name	Product Description	Communication	Supply	Protocol*
GA3111	HT G11	GSM TERMINAL (METER/MODBUS)	2G	85-265 V AC	Meter/Modbus
GA3112	HT G12	GSM TERMINAL (METER/MODBUS)-DC	2G	10-30 V DC	Meter/Modbus
GA3113	HT G13	GSM TERMINAL - AC/DC	2G	85-265 V AC/9-24 V DC	Meter/Modbus
GA3114	HT G14	GSM TERMINAL - AC	2G	85-265 V AC	Meter/Modbus
GA3116	HT G16	4G TERMINAL - AC/DC	4G	85-265 V AC/9-24 V DC	Meter/Modbus
GA3117	HT G17	4G TERMINAL - AC	4G	85-265 V AC	Meter/Modbus

*A maximum of 32 devices can be read in the meter protocol and 247 devices can be read in the Modbus protocol.

Technical Drawing

GSM and 4G Communication Terminal

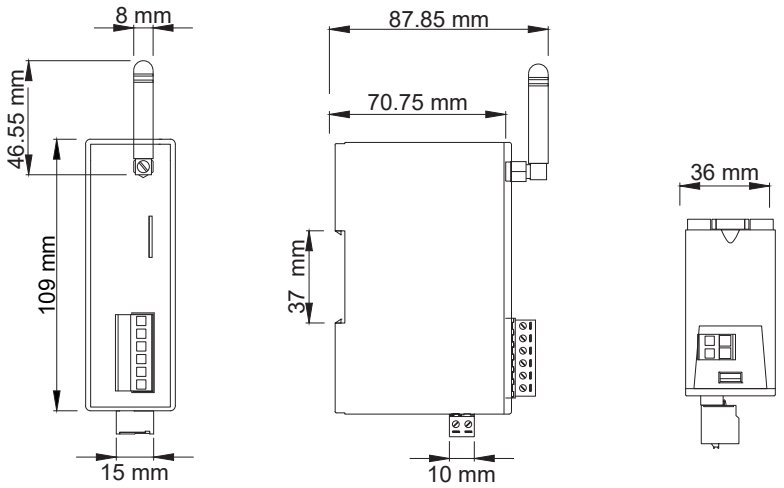

Connection Diagram

GSM and 4G Communication - Modbus (RS-485)

GSM and 4G Communication - Meter (RS-485)

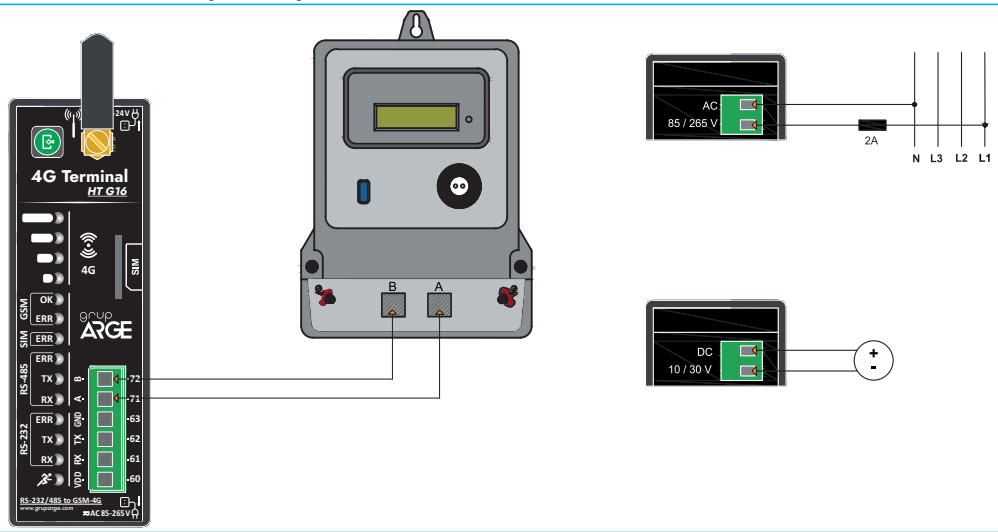

GSM and 4G Communication - Meter (Optical Reader)

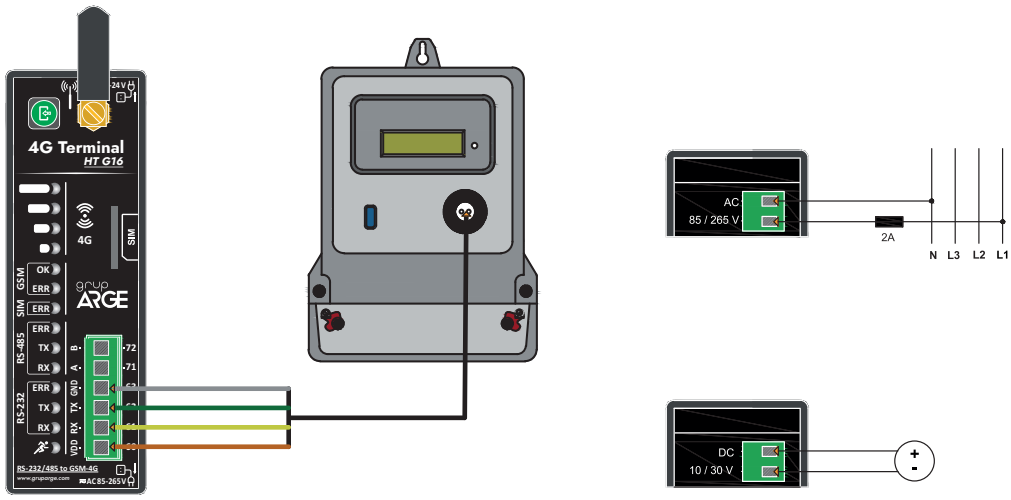

Key Features

- **Compatibility:** RS-485 Standard Modbus RTU protocol supports RS-232 and optical port communication channels.
- **Protocol:** It can communicate with devices that support Modbus RTU and Modbus ASCII protocols. It can communicate with all meters that support TS EN 62056-21 protocol.
- **Modbus Device Quantity:** 32 meters or 247 Modbus devices can be read via RS-485. One meter can be read via optical reader and RS-232.
- It is microprocessor based.
- It has RS-485, RS-232 and optical communication ports.
- **Supply:** HT E21/E23 operates with 85-265 V AC supply. HT E22 works with 10-30 V DC supply.
- **LED Status:** It has LEDs indicating USB, Power, RS-485-Optical (Communication), IP and internet status.
- **Data Sending Period:** It can be adjusted between1-240 minutes.
- **System Architecture:** It has a system architecturethat does not require static IP. In cases where static IP is mandatory, the necessary settings can be made via the USB port on it.
- **Ambient Temperature:** It can operate at ambient temperatures between -10 °C and +60 °C
- **Supply Consumption Power:** <1 VA
- **Protection Class:** IP40 protection class.

HT E21

Technical Features

Product Code	Product Name	Product Description	Communication	Supply	Protokol*
GA3103	HT E21	ETHERNET TERMINAL (METER/MODBUS)	Ethernet	85-265 V AC	Meter/Modbus
GA3104	HT E22	ETHERNET TERMINAL (METER/MODBUS)-DC	Ethernet	10-30 V DC	Meter/Modbus
GA3105	HT E23	ETHERNET-SERIAL GATEWAY - AC	Ethernet	85-265 V AC	Transparent**

*A maximum of 32 devices can be read in the meter protocol and 247 devices can be read in the Modbus protocol.
**HT E23 coded gateway product is not compatible with enerjitakibi.com platform.

Technical Drawing

Ethernet Terminal

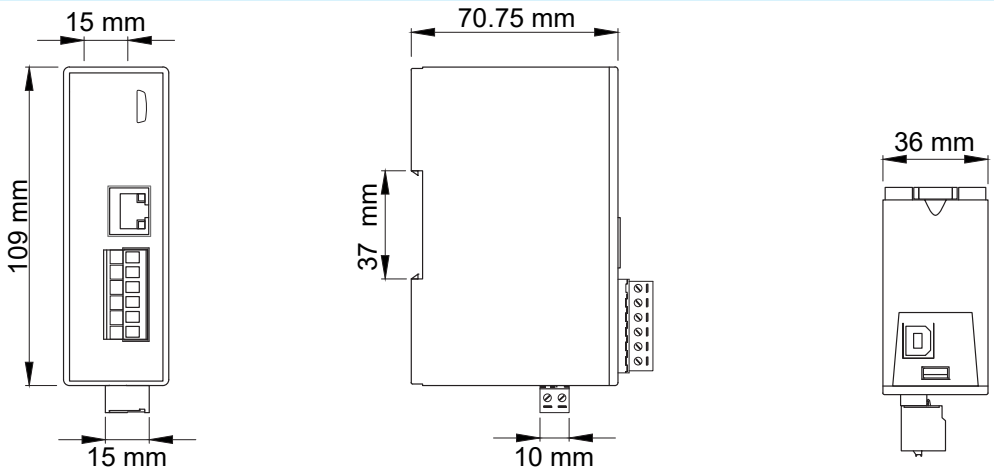

Front View Side View Top View

Connection Diagram

Ethernet Terminal - Power Factor Controller

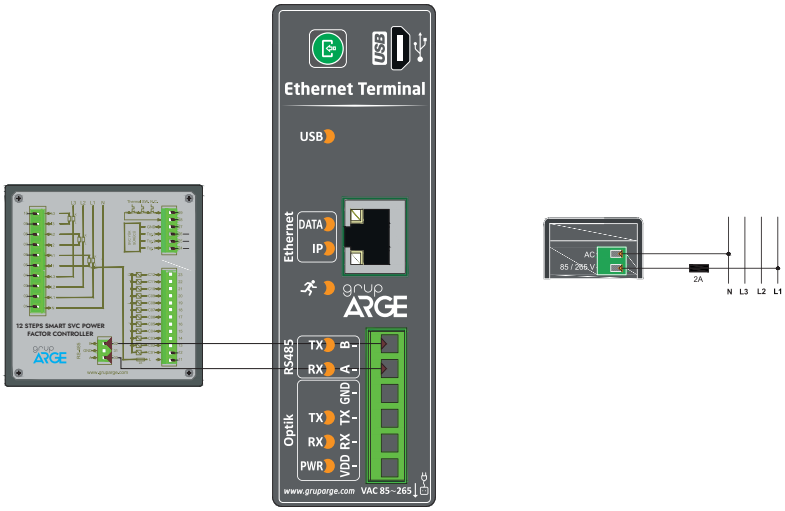

Ethernet Terminal - Meter (RS-485)

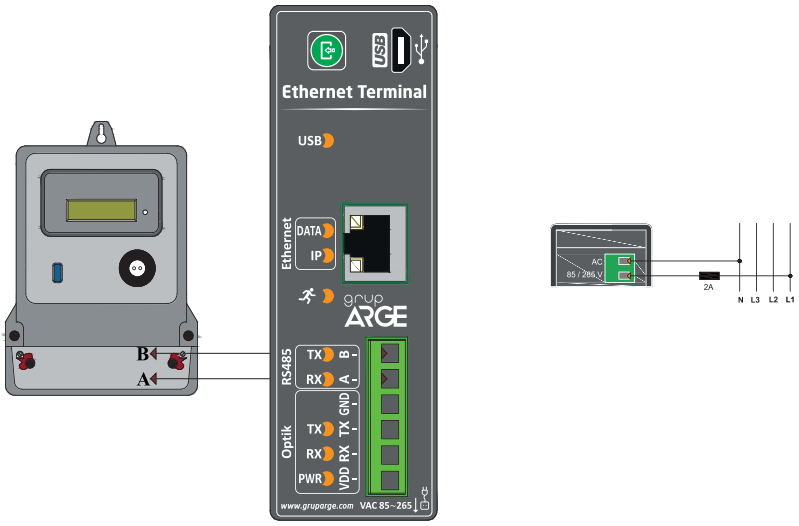

Ethernet Terminal - Meter Optical Reader

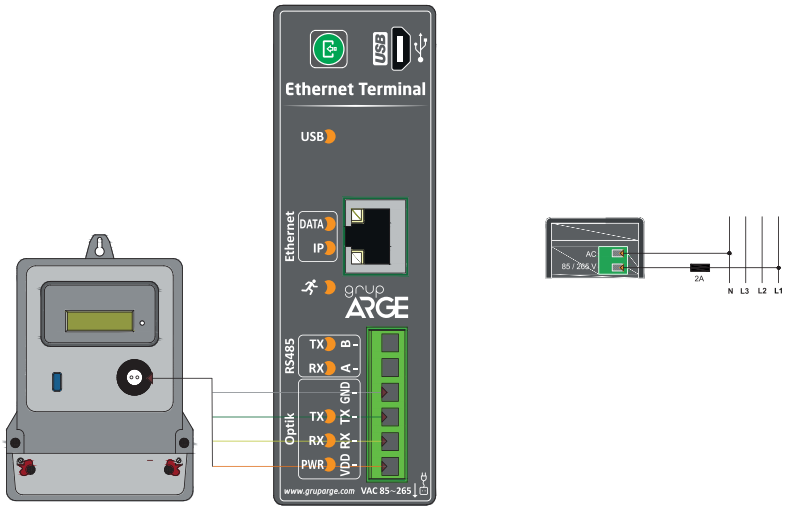

Key Features

- **Power Supply:** The supply range for HT G21/G22/G24/G25 models with AC power supply is 85-265 V with DC supply capability. In the HT G23/G26 models, the supply range is 9-24 V
- **Notification:** HT G21/G22/G24/G25 models detects a power outage and reports it to the center. (HT G23/G26 models do not have this feature.)
- **Communication Channel:** RS-485, RS-232 and optical supports port communication channels.
- **Modbus Device Quantity:** 32 meters or 247 Modbus devices can be read via RS-485. One meter can be read via optical reader and RS-232
- **Protocol:** It can communicate with all meters that support TS EN 62056-21 protocol.
- **Supply Consumption Power:** <1 VA
- It is microprocessor based.
- **LED Status:** It has LEDs that show RS-485/Optical/RS-232 (Communication), Out, In, GSM connection and internet statuses.
- **Data Sending Period:** It can be set between 1-240 minutes.
- **System Architecture:** It has a system architecture that does not require static IP
- **Output:** There are 2 units of dry contact monitoring inputs and 2 units of 5 A relay outputs
- **Compatibility:** It has wired GSM antenna support for places where GSM network signal is weak.
- **GSM Operator Compatibility:** Compatible with M2M data lines of all GSM operators.
- **Ambient Temperature:** It can operate at ambient temperatures between -10 °C and +60 °C
- **Protection Class:** IP40 protection class.

HT G26

Technical Features

Product Code	Product Name	Product Description	Communication	Supply	Protocol*	Input/Output
GA3121	HT G21	GSM AUTOMATION TERMINAL (METER)	2G	85-265 V AC	Sayaç	2/2
GA3122	HT G22	GSM AUTOMATION TERMINAL (MODBUS)	2G	85-265 V AC	Modbus	2/2
GA3123	HT G23	GSM AUTOMATION TERMINAL (MODBUS)-DC	2G	9-24 V DC	Modbus	2/2
GA3124	HT G24	4G AUTOMATION TERMINAL (METER) - AC	4G	85-265 V AC	Sayaç	2/2
GA3125	HT G25	4G AUTOMATION TERMINAL (MODBUS) - AC	4G	85-265 V AC	Modbus	2/2
GA3126	HT G26	4G AUTOMATION TERMINAL (MODBUS) - AC	4G	9-24 V DC	Modbus	2/2

*A maximum of 32 devices can be read in the meter protocol and 247 devices can be read in the Modbus protocol.
• HT G21 - G22 terminals can be manufactured to include both AC and DC supplies upon request.

Technical Drawing

GSM and 4G Automation Terminal

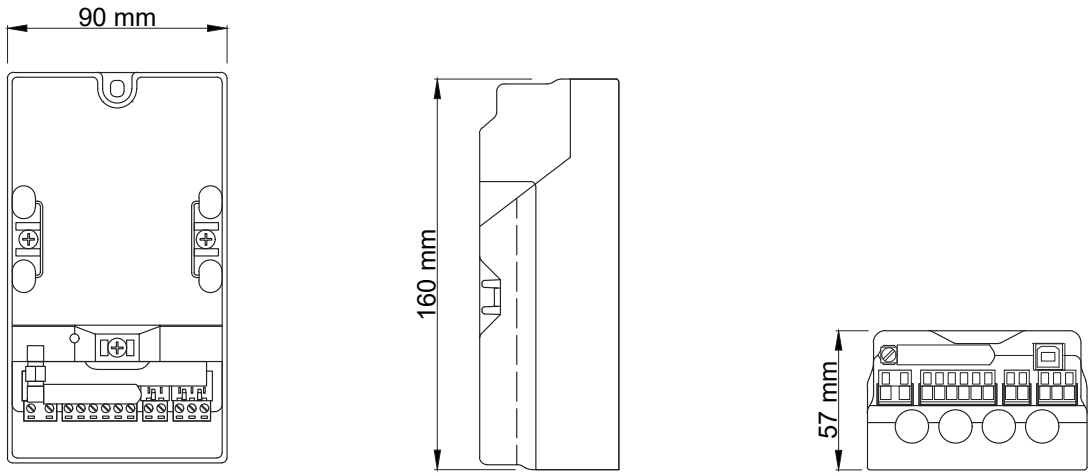

Front View Side View Bottom View

Connection Diagram

GSM and 4G Automation Terminal - Power Factor Controller

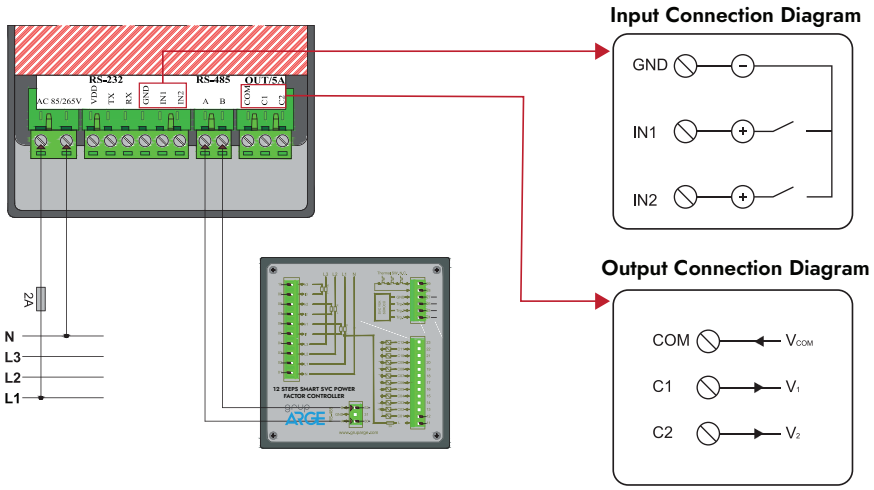

GSM and 4G Automation Terminal - Meter (RS-485)

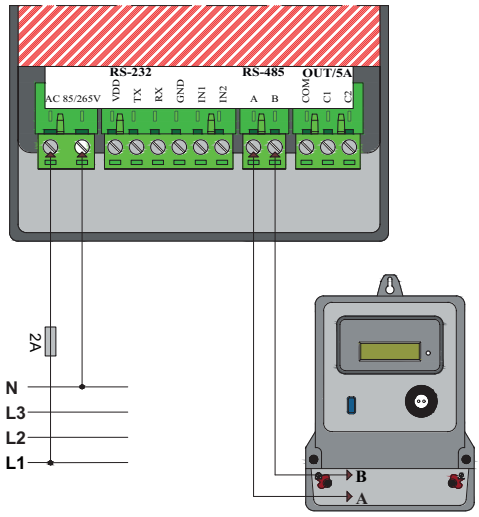

GSM and 4G Automation Terminal - Meter Optical Reader

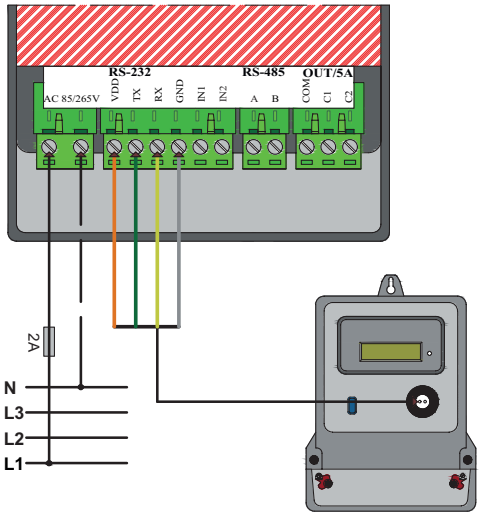

Optical Reader

It is designed to provide information exchange with electronic devices that communicate with the optical reader using IEC1107 (IEC62056-21) protocol. It is used for GPRS or Ethernet based modems used in communication with meters to read data from meters. The optical reader is attached to the metal surface in the optical eye of the electricity meter with the arrow mark on the label pointing upwards.

Key Features

- **Communication Protocol:** IEC1107 (IEC62056-21) RS-232.
- **Cable Cross Section and Length:** 4 x 0.22 mm2, 2.2m
- **Operating Temperature:** 100 ˚C...+600 ˚C
- **Magnet:** Neodymium magnet.
- **Connection Type:** Terminal connection.
- **Weight:** 100 g (with cable).
- **Mounting:** Mounting on the metal surface at the optical port.
- **Protection Class:** IP20
- **Maximum Connection Speed:** 19200 bps

OPT 01

Technical Features

Product Code	Product Name	Product Description
GA3200	OPT 00	OPTICAL READER (PC Compatible)
GA3201	OPT 01	OPTICAL READER (Wired)

Wired GSM Antenna

GSM antennas are high gain antennas used to increase the reception power and quality in environments where GSM signal strength is weak.

ANT 07

Technical Features

Product Code	Product Name	Product Description
GA3202	ANT 03	3 M WIRED GSM ANTENNA (3 dBi)
GA3204	ANT 07	7 M WIRED GSM ANTENNA (9 dBi)

MONITORING SOFTWARE

They are warning-control systems that allow you to remotely control your business, store the information it receives from energy measurement devices, and enable you to receive data analytics, alarms, and reports.

SmartPOWER
Enerji Yönetim Sistemi

SmartPOWER® WEB is a web-based energy management system for energy data collection, consumption analysis and automation over the internet.

With RS-485, RS-232 or optical port connections, meters, power factor controllers, analyzers and many Modbus RTU communication devices can be connected to GPRS or Ethernet terminals. No configuration and static IP required. Installation is completed in minutes with Plug and Play feature.

The terminals transfer the data to a server via internet connection and store the data on the server. You can monitor your data instantly and control your devices from your phone, tablet or computer with internet connection without having to install programs from anywhere.

You can analyze the reactive ratios on the graph and perform many other operations such as detection of problems, phase failure, voltage drop / rise, deterioration of meter current transformers or remote control of your relay in real time.

You can follow up invoices by defining tariffs, report active / reactive consumption and print out in different formats. You will be notified by email and SMS by defining special alarms. With the flexible user authorization system, you can create and authorize downstream users.

It has a user-friendly interface. Visual graphically powered reports allow simple comparisons and analysis.

With the business view, you can create groups and subgroups to group your businesses to review and make comparisons among themselves.

With the contacts on the GSM AUTOMATION modem or using input/output modules, you can set time, temperature, define rules according to the input status or control the output with manual control.

SmartPOWER® Modules and Features
SmartPOWER® Energy Management System is a web-based system developed for the energy efficiency of the enterprise. Thanks to its modular structure, different efficiency applications can be performed separately or as a whole. Thus, electricity, water, natural gas consumption information and control of devices in enterprises are provided in a special way to the enterprise.

Compensation Management Module
• Remote monitoring and control of power factor controllers and analyzers of many brands and models can be made.
• Sending Remote Commands to Devices: All features supported by the device such as transformer test, step test, step status, instant current / voltage information and instant index reading can be controlled by remote command.

Electricity Meter Monitoring Module
• All index data received from the devices can be reported using the date filter. It can be exported in Excel database.
• **Invoice Page:** Taking into account all cost items in electricity bills, it allows creating an invoice in the closest way to the actual invoice format with tariff settings that can be customized by the user. It can be exported in PDF format.

Electricity Billing Module

• It is used for billing business and common consumption in buildings with common areas such as OSBs and shopping malls.
• Campus, block, floor, area, common area and office definitions can be made.
• Electricity consumption can be calculated using devices such as analyzers, meters, etc. with remote reading.

Device Control Module

• The 2 input/output and 8 input/output modules on the GSM modems can be monitored and controlled over the system.
• The outputs can be controlled manually or with daily/weekly schedules depending on the change status of the input information. It can also be controlled depending on the change status of another input information.
• With the Analog Monitoring Module, control can be provided according to the data received from analog sensors.

Generator Control Module

• The generator can be remotely sent Start/Stop/Auto/Reset commands.
• Information such as generator status, oil pressure, temperature, fuel level, battery voltage, total run time, number of restarts, time remaining until next maintenance, total energy produced, grid voltages (L1, L2, L3, L12, L23, L31) grid frequency, generator voltage (L1, L2, L3, L12, L23, L31), generator frequency, current drawn, active power, reactive power, engine rotation speed, etc. can be received.

Natural Gas Monitoring Module

• Data can be received via pulse cables that are connected to the mechanical natural gas meter.
• Invoice Page: It enables the creation of invoices in the closest way to the actual invoice format with tariff settings that can be customized by the user, taking into account all cost items in natural gas invoices.

Water Meter Monitoring Module

• With MODBUS communication module, index data can be received from meters.
• Indices and consumption can be reported graphically and tabularly.
• It can be printed in Excel, JPEG and PNG formats.

Invoice Tracking Module

• With MODBUS communication module, index data can be obtained from meters.
• Indices and consumption can be reported graphically and tabularly.
• Subscribers who are subject to reactive penalty or approaching the penalty limit can be reported.

Analog Monitoring Module

• It is used for collecting and reporting data from 4-20 mA and 0-10 V analog sensors.
• It can be reported graphically and tabularly.
• Output control can be made according to sensor data by using the Device Control Module.

Flow Measurement Module

• Flow rate can be measured by using a flow meter. Instant flow measurement can be made.
• Daily, monthly and yearly flow status or consumption history can be reported graphically for the past.
• It can be printed in Excel, JPEG and PNG formats.

IOS

You can download our SmartPOWER® mobile application from the App Store application store on iOS operating system.

ANDROİD

You can download our SmartPOWER® mobile application from the Play Store app store on the Android operating system.

SmartPOWER® Web Operation

Feature Table

Features	SmartPOWER® Web
WEB BASED	✓
INDEPENDENT ACCESS	✓
ARCHIVING	✓
ANALYZER	✓
POWER FACTOR CONTROLLER	✓
METER	✓
MODBUS RTU	✓
SYSTEM PARAMETERIZATION	✓
RTU	✓
USER AUTHORIZATION SERVICES	✓
REGION DEFINITION	✓
TARIFF CREATION	✓
BULK TABLE VIEW	✓
FRONT PANEL VIEW	✓
AUTOMATIC SCREEN UPDATE	✓
SEND COMMAND	✓
ALARM TYPES	✓
ALARM SUBSCRIPTION	✓
SMS / E-MAIL	✓
PERIODIC VALUES	✓
ENERGY	✓
CHARGING	✓
COMPENSATION	✓
IOT CONTROL	✓
SYSTEM LOGS	✓
DEVICE SETTINGS	✓
DATA OUTPUT (XLS, PDF, JPG)	✓
SELECT DATE AND TIME	✓

Alarm Notifications

E-Mail

- Voltage Alarm
- Unbalanced Current Alarm
- Over 5 A Current Alarm
- Meter Phase Failure Alarm
- Energy Consumption Alarm
- Low Battery Alarm
- Trunk Lid Opened Alarm
- Terminal Block Cover
- Opened Alarm
- Current Alarm
- Import Demand Exceedance Alarm
- Export Demand Exceedance Alarm
- Indefinite Lighting Alarm
- Astronomical Lighting Alarm
- Time Dependent Current Alarm
- Power Control Alarm
- Temperature Alarm

E-Mail / Sms

Reactive Over-Limit Alarm
Communication Error Alarm
Power Failure Alarm
Input Changes Alarm
Temperature Alarm

grup ARGE

www.yestakibi.com

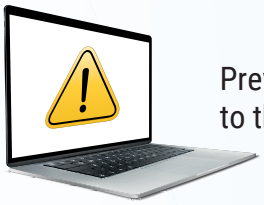

Prevention of production losses thanks to the advanced alarm feature

Easy access from anywhere thanks to the cloud system

Entire portfolio manage from a single screen

Compatible with all inverter brands/models

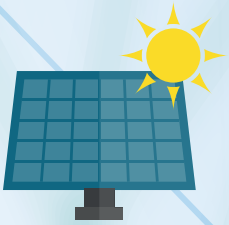

INNOVATIVE SOLUTIONS IN RENEWABLE ENERGY SYSTEM

Name : Solar Classification : Sun PV Capacity : 1000 Address : Göynük/Bolu	Today's Production 68.88 KWh	Total Production 6.17 GWh

Production Information

155.82 KWh
Today's Production

9.88 GWh
Total Production

Today's Production

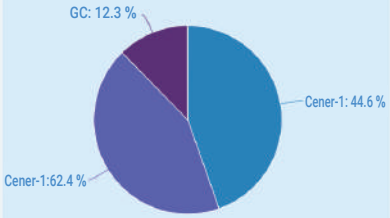

Total Production

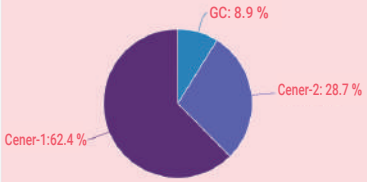

www.yestakibi.com

SmartPower® PC is an economical solution with simpler features. Available with a one-time license. No monthly or annual subscription is required. Saves server and terminal costs. All you need is a computer with a USB / RS-485 converter. Since Ethernet communication is not required, it is not designed according to ethernet protocol.

The software was developed to help solve your basic energy problems. You can manage the energy of a large enterprise or manage only one measuring point.

SmartPower® PC is easy to set up and use. No modem or network connection required. Stores data on your computer. With a USB / RS-485 converter, you can start monitoring devices with serial connection.
With the current version of **SmartPower® PC** software, only power factor controllers and analyzers produced by Grup Arge can be monitored.

SmartPower® Web service is recommended for other brand devices and meter monitoring.

- Real-time data collection,
- Data reporting, graphing and document outputs in tabular form,
- Reporting between two selected dates,
- Consumed energy and instant values of the selected device,
- Ability to add Modbus compatible devices,
- Zone identification via port,
- Remote configuration of measuring devices,
- Ability to access the writable registers of the devices,
- Alarm identification (Reactive Limit Exceeding, Communication, Voltage),
- Desktop notifications for alarms,
- Instant monitoring of desired parameters of selected devices.

SmartPOWER® PC Operation

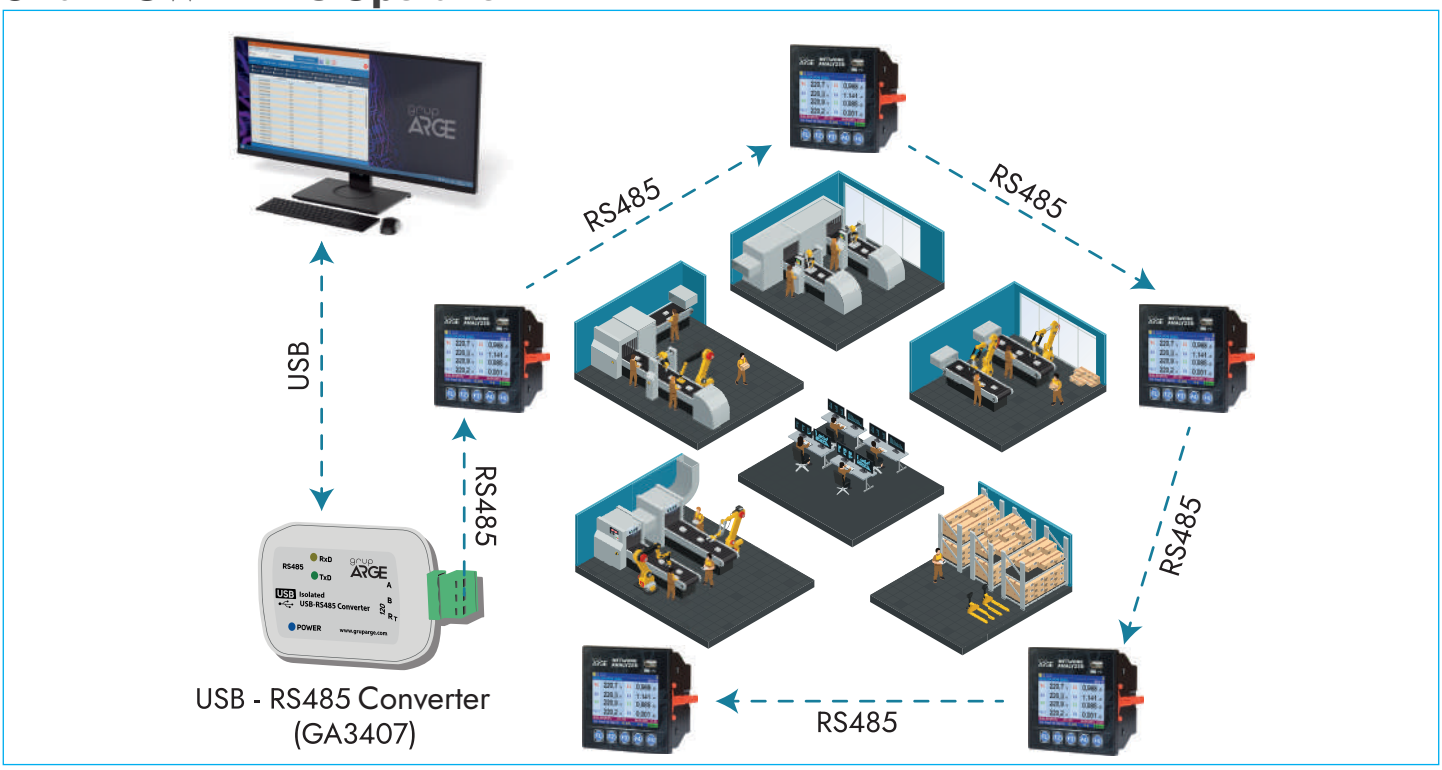

Feature Table

Features	SmartPOWER®
ANALYZER	Grup Arge*
POWER FACTOR CONTROLLER	Grup Arge*
SYSTEM PARAMETERIZATION	✓
RTU	✓
FRONT PANEL VIEW	✓
AUTOMATIC SCREEN UPDATE	✓
SEND COMMAND	✓
ALARM TYPES	3 (Desktop Notification)**
PERIODIC VALUES	✓
ENERGY	✓
DATA OUTPUT (XLS, PDF, JPG)	✓
SELECT DATE AND TIME	✓

***Grup Arge**
The current version only supports Grup Arge branded devices.

****Desktop Notification**
- Reactive Over Limit Alarm
- Communication Error Alarm
- Voltage Alarm

The 8 relay outputs on the device can be controlled remotely via Modbus RTU. It can be monitored remotely with **SmartPOWER®** modems and can also be integrated into other systems. COM terminal is the common terminal of the relay. When a relay is activated, the voltage connected to the COM terminal is output and the related output LED lights up. Loads up to 5 Amps can be switched directly from the relay output. If over 5 Amps current is to be drawn, it is necessary to control the load via a contactor. In this case, the relay output is used as the trigger signal of the contactor.

Note: It can also be integrated into any system (SCADA etc.) that supports Modbus RTU communication protocol.

Key Features

- Microprocessor based.
- **Output:** There are 8 relays with contact output current 5 A (230 V)
- **Communication Protocol:** RS-485 communication with Modbus RTU protocol.
- **Mounting:** It can be mounted on DIN rail.
- **LED Status:** LEDs indicating supply, fault, communication and output status.

OM C8A

Technical Features

Product Code	Product Name	Product Description	Supply	Communication
GA3401	OM C8D	8-OUTPUT MODULE (DC SUPPLY)	9-30 V DC	RS-485
GA3402	OM C8A	8-OUTPUT MODULE (AC SUPPLY)	85-265 V AC	RS-485

Technical Drawing

8 Output Module

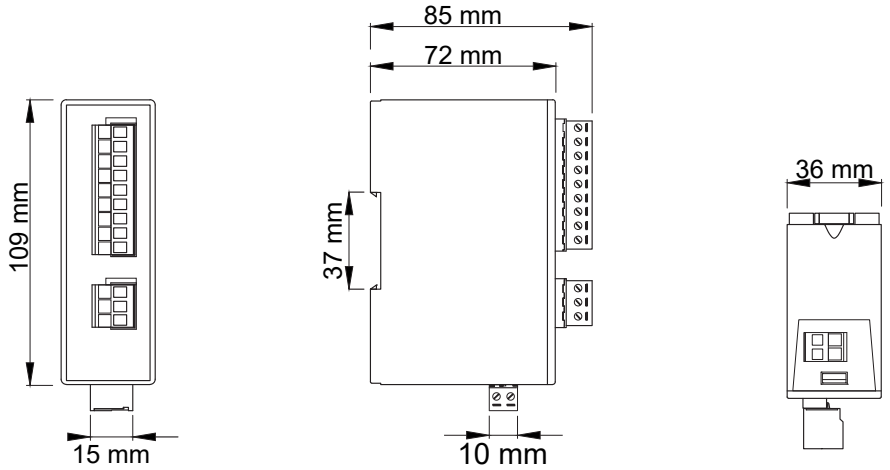

Front View | Side View | Top View

Connection Diagram

8 Output Module AC

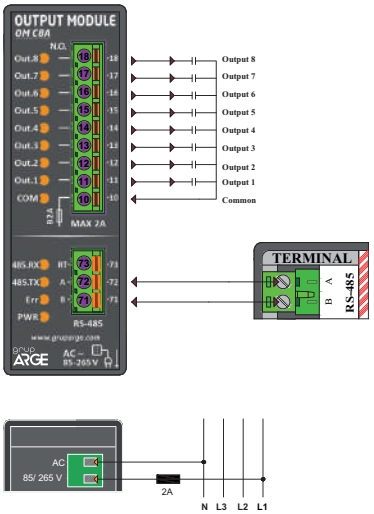

RT Terminal Block: It is used for optional activation of 120 Ω terminating resistor.

The terminating resistor is connected between RT and A terminals.

8 Output Module DC

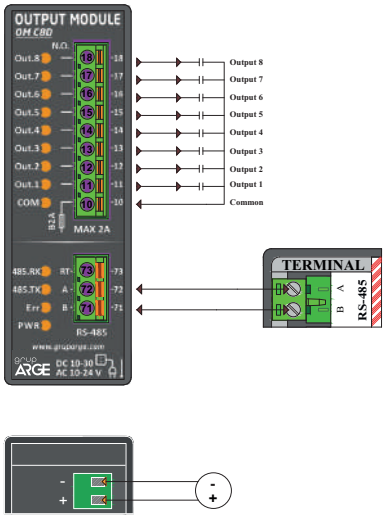

RT Terminal Block: It is used for optional activation of 120 Ω terminating resistor.

The terminating resistor is connected between RT and A terminals.

The device has been developed to provide remote monitoring of the status of 8 pieces of dry contact inputs via Modbus RTU. It can be monitored remotely with SmartPOWER® modems or can be integrated into other systems. One end of the dry contact to be monitored is connected to the COM terminal and the other end is connected to any of the inputs L1 - L8. In case of open contact, the related LED is off, while in case of closed contact, the related LED is on.
Note: It can also be integrated into any system (SCADA etc.) that supports Modbus RTU communication protocol.

Key Features

- Microprocessor based.
- **Input:** There are 8 relays with contact input current
- 5 A (230 V)
- **Communication Protocol:** RS-485 communication
- with Modbus RTU protocol.
- **Mounting:** It can be mounted on DIN rail.
- **LED Status:** LEDs indicating supply, fault,
- communication and input status.

OM G8A

Technical Features

Product Code	Product Name	Product Description	Supply	Communication
GA3403	OM G8D	8-INPUT MODULE (DC SUPPLY)	9-30 V DC	RS-485
GA3404	OM G8A	8-INPUT MODULE (AC SUPPLY)	85-265 V AC	RS-485

Technical Drawing

8 Input Module

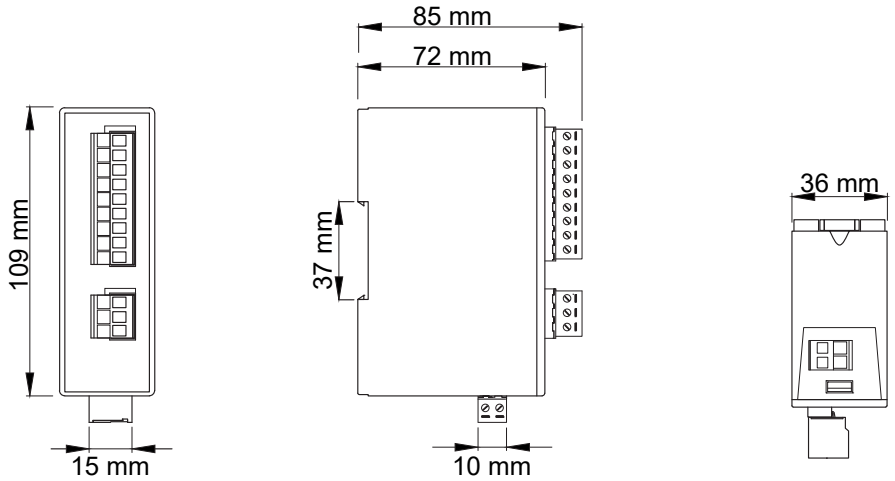

Front View
Side View
Top View

Connection Diagram

8 Input Module AC

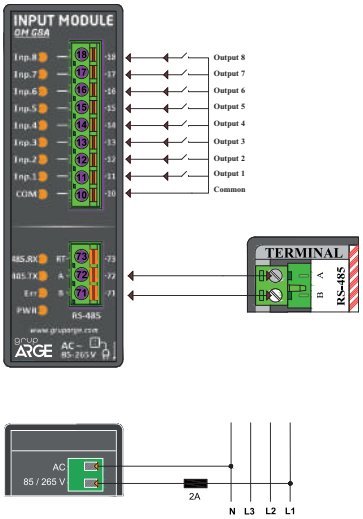

RT Terminal Block: It is used for optional activation of 120 Ω terminating resistor.

The terminating resistor is connected between RT and A terminals.

8 Input Module DC

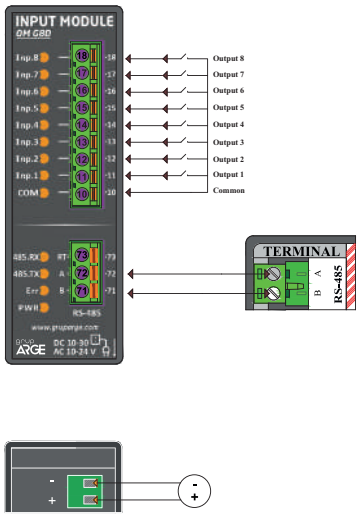

RT Terminal Block: It is used for optional activation of 120 Ω terminating resistor.

The terminating resistor is connected between RT and A terminals.

Analog Input Module Analog sensor data with 0-10 V DC and 4-20 mA DC output can be read via RS-485 line and Standard Modbus RTU protocol. The device can be mounted on the rail inside the panel.

Key Features

- Microprocessor based.
- **Supply:** It works with 9-30 Volt DC supply.
- **Communication Protocol:** Supports RS-485 Standard Modbus RTU protocol.
- **Input:** There are 3 pieces of 0-10 V DC analog sensor inputs. There are 3 pieces of 4-20 mA DC analog sensor inputs.
- **LED Status:** Power, Error, RS485 (Communication) LEDs.
- **Ambient Temperature:** It can operate at ambient temperatures between -10 ˚C and +60 ˚C
- **Supply Consumption Power:** <1 VA
- **Protection Class:** IP40.

OM AG

Technical Features

Product Code	Product Name	Product Description	Supply	Communication
GA3405	OM AG	ANALOG INPUT MODULE	9-30 V DC	RS-485

Technical Drawing

Analog Input Module

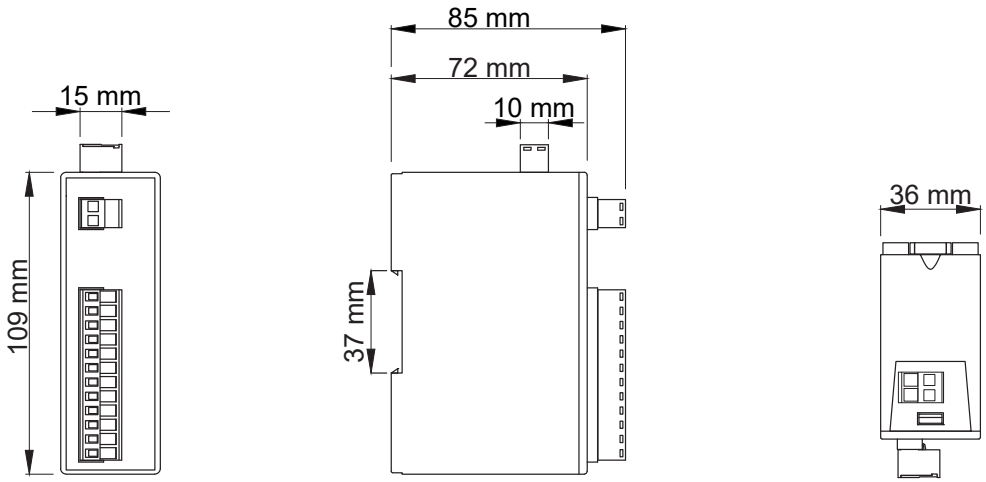

Front View Side View Top View

Connection Diagram

Analog Input Module

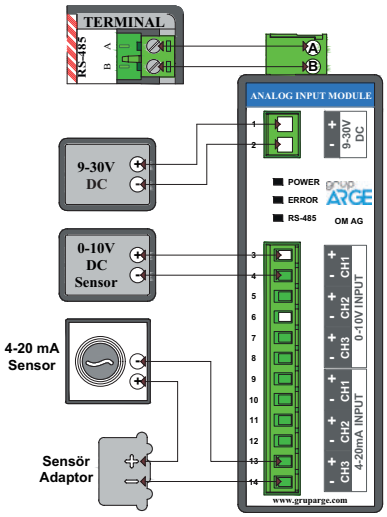

The heat and light meter device can be used with Ethernet terminal, GSM automation terminal and GSM terminal. When measuring ambient variables such as temperature and light intensity, it enables the device to be turned on or off at specified value intervals through the output module.

Key Features

- **Communication:** RS-485 (Standard Modbus RTU).
- **Supply:** 12 V DC
- **Cable Cross Section:** 4x0.22 mm²
- **Temperature Measurement Range:** -55 ˚C to +150 ˚C
- **Light Intensity Measurement Range:** 01-10.000 lux
- **Connection Type:** Terminal connection.
- **Weight:** 40gr (with cable).

OM ISI

Technical Features

Product Code	Product Name	Product Description	Supply	Communication
GA3406	OM ISI	HEAT - LIGHT METER	12 V DC	RS-485

Connection Diagram

Heat - Light Meter

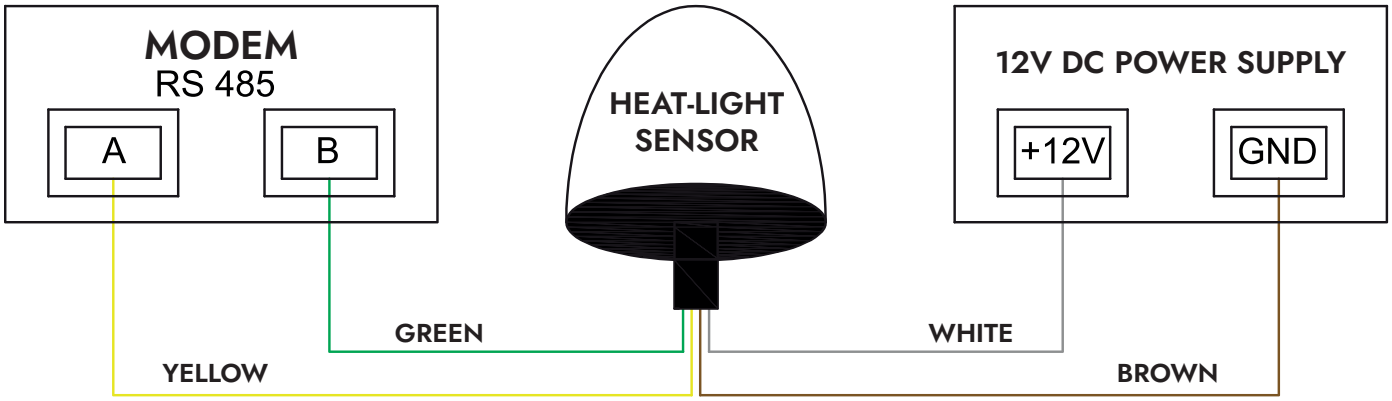

It is used as a USB to RS 485 converter to exchange data with the device or devices that communicate with the PC (USB port) via RS 485

Key Features

- It is microprocessor based.
- **Port:** It has the ability to work via USB (mini) port (2.0 support).
- **Isolated Communication:** It has a maximum of 500 kbps isolated communication (1.5 kV voltage isolation) feature.
- **Number of Communicating Devices:** RS-485 communication, it can convert the data of 32 devices at the same time.
- **LED Status:** It has Power, RS-485 Communication RX and TX LEDs.
- **Terminator:** The device has a built-in 120Ω terminator. If desired, the internal terminating resistor can be activated with Rt terminal connection.
- **Ambient Temperatures:** It can operate at ambient temperatures between -10 ˚C and +60 ˚C
- **Supply Consumption Power:** < 1 VA
- **Protection Class:** IP40

OM USB485

Technical Features

Product Code	Product Name	Product Description	Communication
GA3407	OM USB485	USB-RS485 CONVERTER (1.5kV isolated)	USB/RS-485

Technical Drawing

USB to RS485 Converter

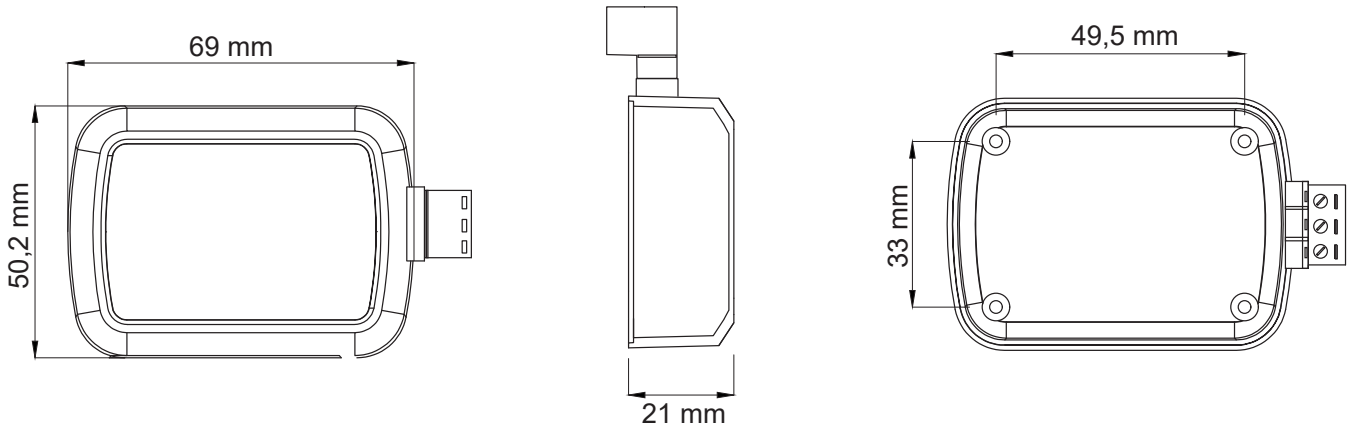

Front View | Side View | Back View

Connection Diagram

USB to RS485 Converter

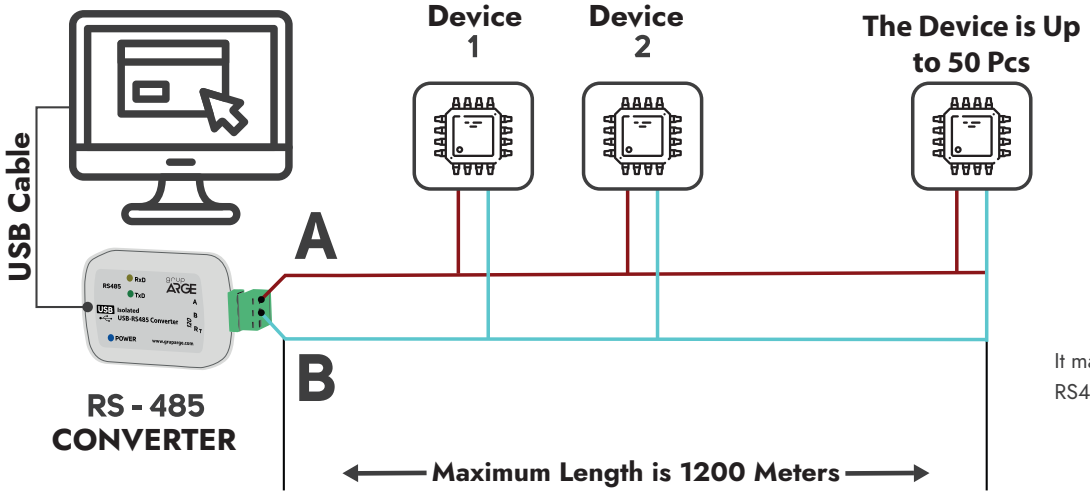

It may vary depending on the RS485 Converter that is used.

With 6 counter inputs, it simultaneously counts and records pulse output counters separately. Data can be read and edited via Modbus RTU protocol with RS-485 line. Time-based counting operations can be performed with the clock chip on it.

Key Features

- It is microprocessor based.
- **Supply:** It works with 9-30 V DC supply.
- **Communication Protocol:** RS-485 Supports standard MODBUS RTU protocol.
- **Input:** 6 pulse inputs are available.
- **LED Status:** It has POWER (Power), ERROR (Error), RS-485 (Communication) LEDs.
- **Operating Ambient Temperature of the Device:** -10 °C to +55 °C
- **Supply Consumption Power:** Less than 1 VA
- **Protection Class:** IP40 protection class

OM PALS

Technical Features

Product Code	Product Name	Product Description	Supply	Communication
GA3408	OM PALS	PALS COUNTER	9-30 V DC	RS-485

Technical Drawing

Pulse Counter

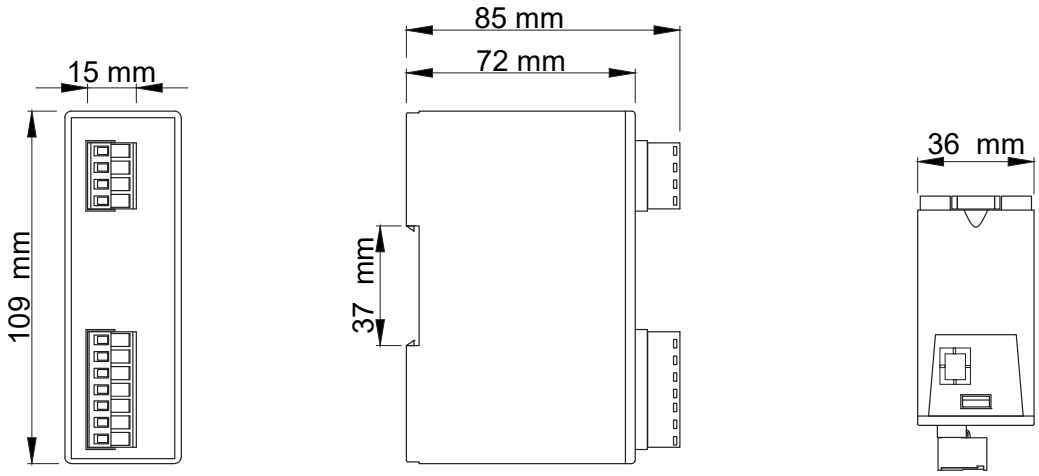

Front View Side View Top View

Connection Diagram

Pulse Counter

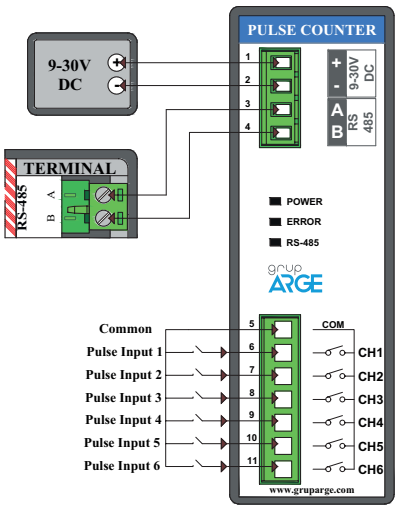

CONTROL AND PROTECTION

Astronomical Time Relays

AST01 is a digital time relay with a real time clock that automatically calculates the sunrise and sunset times. AST01 is designed to control the devices connected to its contact according to the set days and hours of the week, as well as the set sunrise or sunset times. Thanks to the NFC antenna on the device, device configuration/programming can be done via a smartphone with the TouchConfig mobile application. Through this application, 32 different programs can be created and installed on the device.

Time Relays

Electronic time relays are microprocessor-based devices used in time critical processes. These devices are specially designed to activate or deactivate a circuit or a system within the set time and function. This relay group, which is generally used in the control panels of power circuits, can control the system by changing the relays positions basically with or without delay.

Voltage Protection Relays

They are devices used to protect motors and systems against neutral breakage, phase absence, high voltage, low voltage and phase sequence faults.

Phase Protection Relays

They are devices used to prevent the motors from being damaged by overheating due to the absence of phase or voltage imbalance and to prevent problems that may arise from phase sequence error. There are types operating according to fixed or adjustable asymmetry.

Astronomical Time Relays 90
Time Relays 91
Voltage Protection Relays 93
Phase Protection Relays 94

NEW PRODUCT

- Programming with Android and iOS Supported with NFC Feature
- 24 Hour Time Setting
- Automatic Coordinate Selection from City List
- DIN1 Rail Mounting
- *Pre-installation Programming

*Thanks to the NFC feature, it can be programmed without powering the device through the set profile.

Technical Features

Product Code	Product Name	Product Description	Replaceable Battery	24 Hour Time Setting	Automatic Coordinate Selection from City List	Operating Voltage	Operating Frequency	Number of Programs	Programming Interface	Supported Platforms	Relay Output	Dimensions W x H x D (mm)	Parcel Quantity
GA8151	AST01	NFC ENABLED ASTRONOMICAL TIME RELAY	✓	✓	✓	12-240 V AC/DC	50-60 Hz	32	NFC	Android iOS	R1 output (NO)/ 10A 250V AC R2 output (NC) / 6A 277V AC	18,5 x 91 x 57	10

Technical Drawing

Astromomic Time Relay

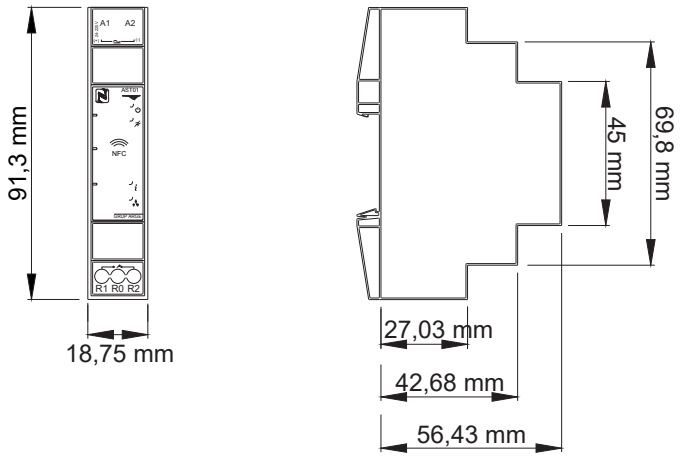

Front View

Side View

Connection Diagram

Astromomic Time Relay

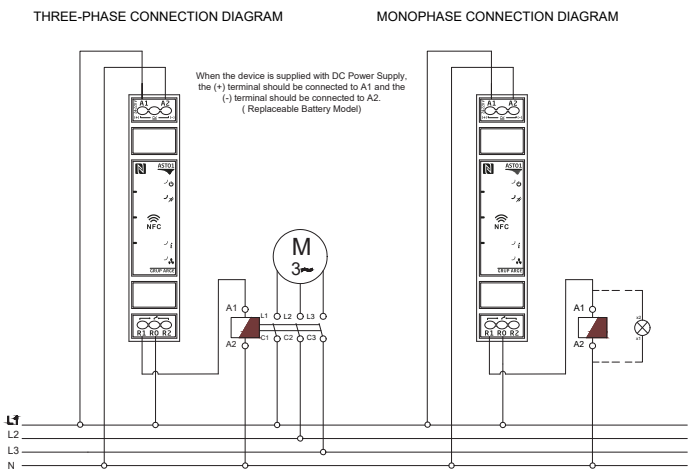

Technical Features

Product Code	Product Name	Product Description	Time Interval	Contact Output		Trigger	Neutral Triggered	24V AC / DC	220 V AC	Delayed on Pull	Delayed on Release	Open Flasher	Closed Flasher	Symmetric Flasher	Star-Delta	Control Input Delayed on Pull	Delayed Drop On Falling Edge Pull On Rising Edge	Delayed On Trigger Pull 1 Second Delayed In Pulse Triggere Release	Trigger Floor Automatic	Smart Test Mode
				1C/O, 5A, 1250 VA	2N/O, 5A, 1385 VA															
GA8101	ZMN01	TIME RELAY (0.1 sec-30 sec)	0.1 sec - 30 sec	✓				✓	✓	✓										
GA8102	ZMN02	TIME RELAY (0.1 sec-60 sec)	0.1 sec - 60 sec	✓					✓	✓										
GA8103	ZMN03	TIME RELAY (0.1 sec-30 h)	0.1 sec - 30 hours	✓				✓	✓	✓	✓									
GA8104	ZMN04	TIME RELAY (0.1 sec-999 min)	0.1 sec - 999 min	✓				✓	✓	✓	✓									
GA8111	ZMN11	FLASHER RELAY	0.1 sec - 30 hours	✓				✓	✓			✓	✓	✓						
GA8121	ZMN21	MULTIFUNCTIONAL TIME RELAY	0.1 sec - 99 hours	✓		✓			✓	✓	✓			✓		✓	✓	✓		
GA8131	ZMN31	LEFT-RIGHT TIME RELAY (OFF START)	0.1 sec - 30 hours		✓				✓											
GA8132	ZMN32	STAR DELTA TIME RELAY	Y-U:20-600ms Y:1-60sec		✓			✓	✓						✓					
GA8141	ZMN41	FIRE/FLOOR AUTOMAT	0.1 sec - 8 min	✓			✓		✓										✓	✓

ZMN01

Technical Drawing

Time Relay

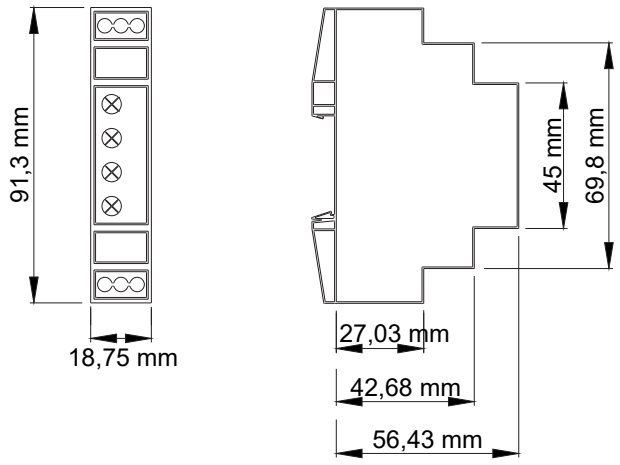

Front View Side View

Connection Diagram

ZMN01

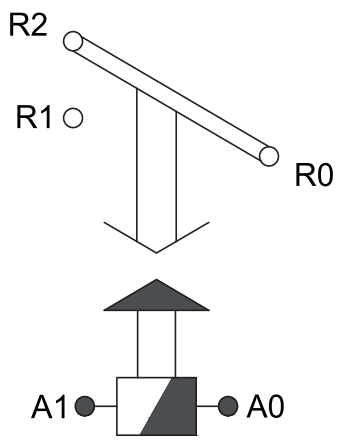

(180/280 V AC)

ZMN02

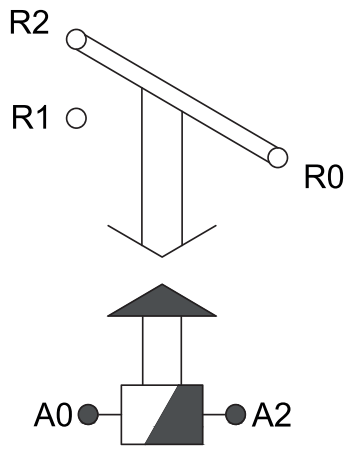

(18-28 V AC/DC)

ZMN03

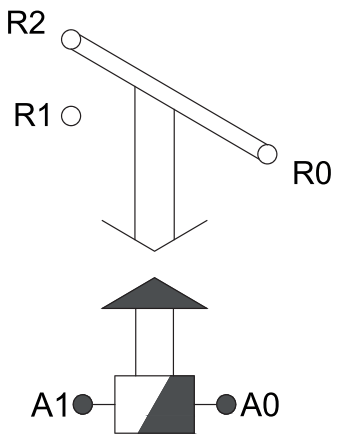

(180/280 V AC)

ZMN04

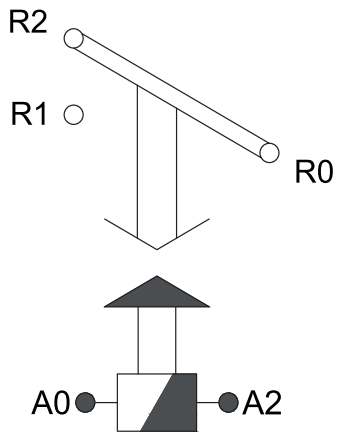

(18-28 V AC/DC)

ZMN11

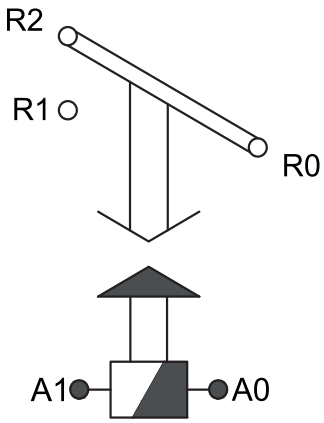

(180/280 V AC)

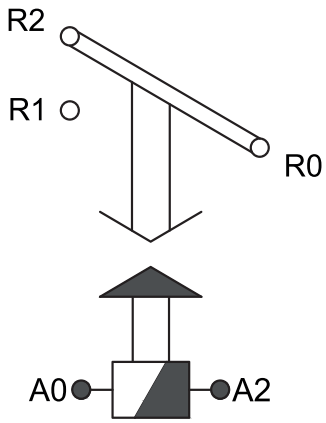

(18-28 V AC/DC)

ZMN21 - 41

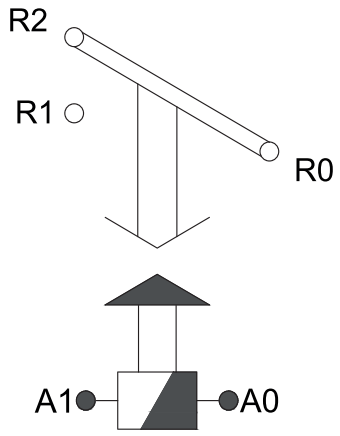

(180-280 V AC/DC)

ZMN31

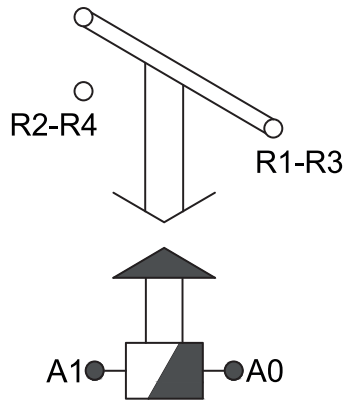

(180-280 V AC/DC)

ZMN32

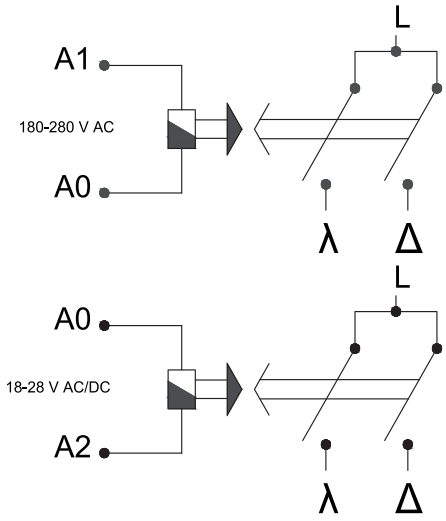

Technical Features

Product Code	Product Name	Product Description	Contact Output	Neutral Connection	Non-Neutral Connection	Neutral Break Detection	Three-Phase Usage	Mono-Phase Usage	Phase Sequence Control	Phase Absence Detection	High Voltage Control	Over Voltage Instant-on Protection	Low Voltage Control	Low Voltage Instant-on Protection	Adjustable on Delay	Insufficient - Overfeed Warning	Neutral - Phase Reverse Warning	Dial	Supply
			Output																
GA8201	GRL01	VOLTAGE PROTECTION RELAY (MONOPHASE COMPATIBLE)	✓	✓			✓	✓		✓	A	✓	A	✓	✓	✓	✓	Monophase	3 Phase-Neutral
GA8202	GRL02	VOLTAGE PROTECTION RELAY (THREE-PHASE COMPATIBLE)	✓	✓		✓	✓			✓	A	✓	A	✓	✓	✓		Three-phase	3 Phase-Neutral
GA8203	GRL03	PHASE SEQUENTIAL VOLTAGE PROTECTION RELAY	✓	✓		✓	✓		✓	✓	A	✓	A	✓	✓	✓		Three-phase	3 Phase-Neutral
GA8211	GRL11	NON-NEUTRAL VOLTAGE PROTECTION RELAY	✓		✓		✓			✓	A	✓	A	✓	✓	✓		Three-phase	3 Phase
GA8212	GRL12	NON-NEUTRAL PHASE SEQUENTIAL VOLTAGE REALY	✓		✓		✓		✓	✓	A	✓	A	✓	✓	✓		Three-phase	3 Phaze

GRL01

A: It can be adjustable and can be switched off.

Technical Drawing

Voltage Protection Relay

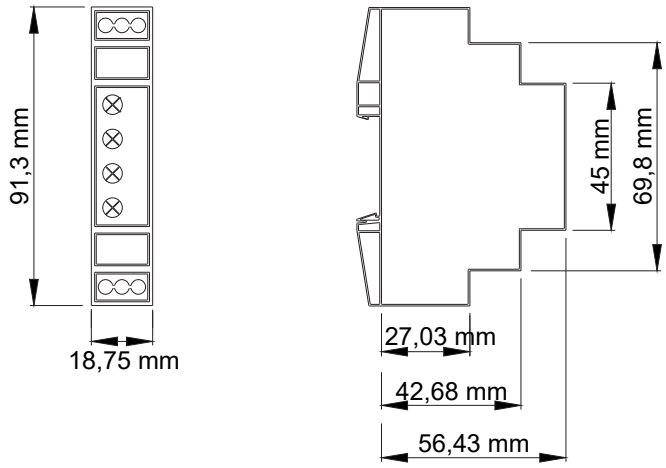

Front View Side View

Connection Diagram

3 Phase Voltage Protection Relay

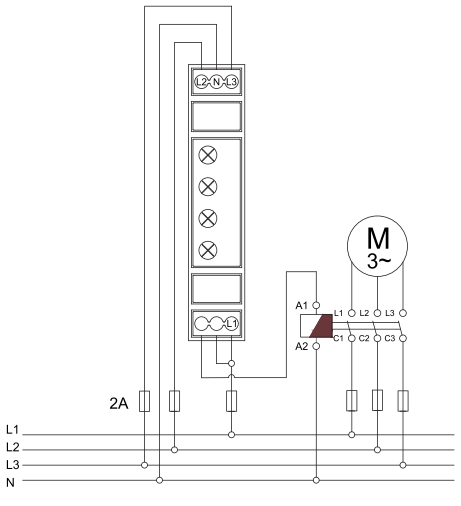

2 Phase Voltage Protection Relay

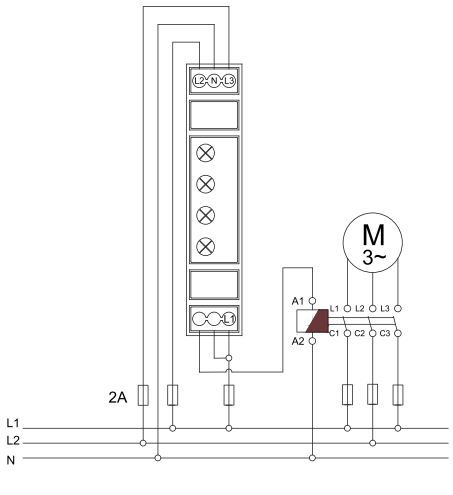

1 Phase Voltage Protection Relay

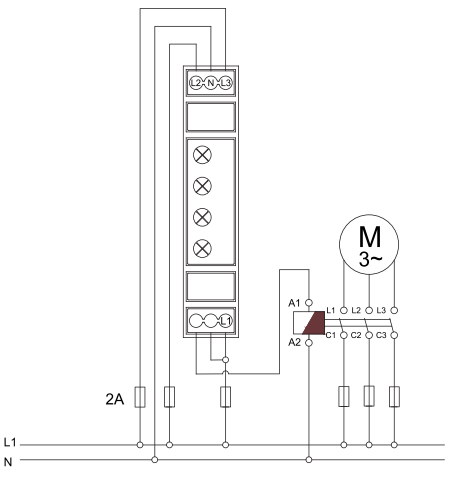

Technical Features

Product Code	Product Name	Product Description	Contact Output 1N/O, 5A, 1385 VA	Neutral Connection	Non-Neutral Connection	Neutral break Detection	Neutral break Detection	Phase Sequence Contro	Fixed Asymmetry	Adjustable Asymmetry	Adjustable Pull delay	Adjustable on Delay	Insufficient - Overfeed Warning	Low Voltage Control	High Voltage Control	Supply
GA8301	FAZ01	PHASE PROTECTION RELAY (20% ASYMMETRY)	✓	✓		✓		✓	20%				✓			3 Phase-Neutral
GA8302	FAZ02	PHASE PROTECTION RELAY (5-35% ADJUSTABLE ASYMMETRY)	✓	✓		✓		✓		5-35%	✓	✓	✓			3 Phase-Neutral
GA8303	FAZ03	PHASE SEQUENTIAL PHASE PROTECTION RELAY 40% ASYMMETRY)	✓	✓		✓	✓	✓	40%				✓			3 Phase-Neutral
GA8304	FAZ04	PHASE SEQUENTIAL PHASE PROTECTION RELAY (5-35% ADJUSTABLE ASYMMETRY)	✓	✓		✓	✓	✓		5-35%	✓	✓	✓			3 Phase-Neutral
GA8311	FAZ11	NON-NEUTRAL PHASE SEQUENTIAL PHASE PROTECTION RELAY (5-40% ADJUSTABLE ASYMMETRY)	✓		✓		✓	✓		5-40%			✓			3 Phase
GA8312	FAZ12	NON-NEUTRAL PHASE SEQUENTIAL PHASE PROTECTION RELAY (5-35% ADJUSTABLE ASYMMETRY)	✓		✓		✓	✓		5-35%	✓	✓	✓			3 Phase
GA8313	FAZ13	VOLTAGE-CONTROLLED NON-NEUTRAL PHASE SEQUENTIAL PHASE PROTECTION RELAY (5-40% ADJUSTABLE ASYMMETRY)	✓		✓		✓	✓		5-40%		✓	✓	A	A	3 Phase

FAZ12

A: It can be adjustable and can be switched off.

Technical Drawing

Phase Protection Relay

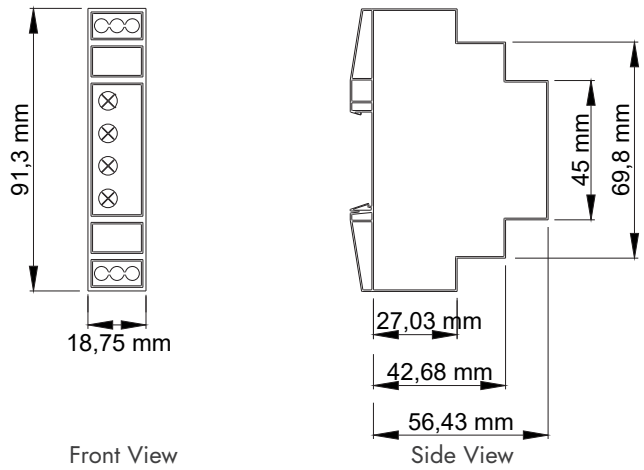

Connection Diagram

Phase Protection Relay

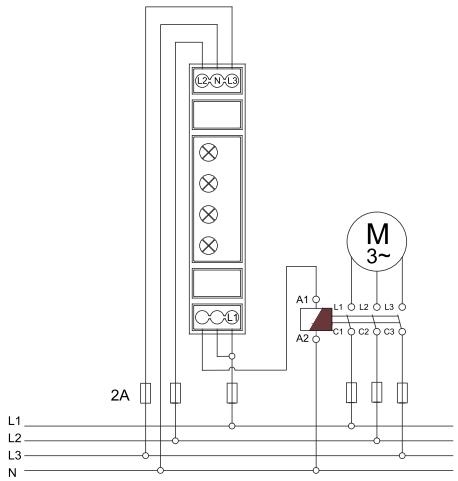

*Please scan the QR code to view all our quality certificates and documents.

grup ARGE

INNOVATIVE SOLUTIONS IN COMPENSATION AND ENERGY EFFICIENCY