GENERAL CONNECTION EXAMPLE 1

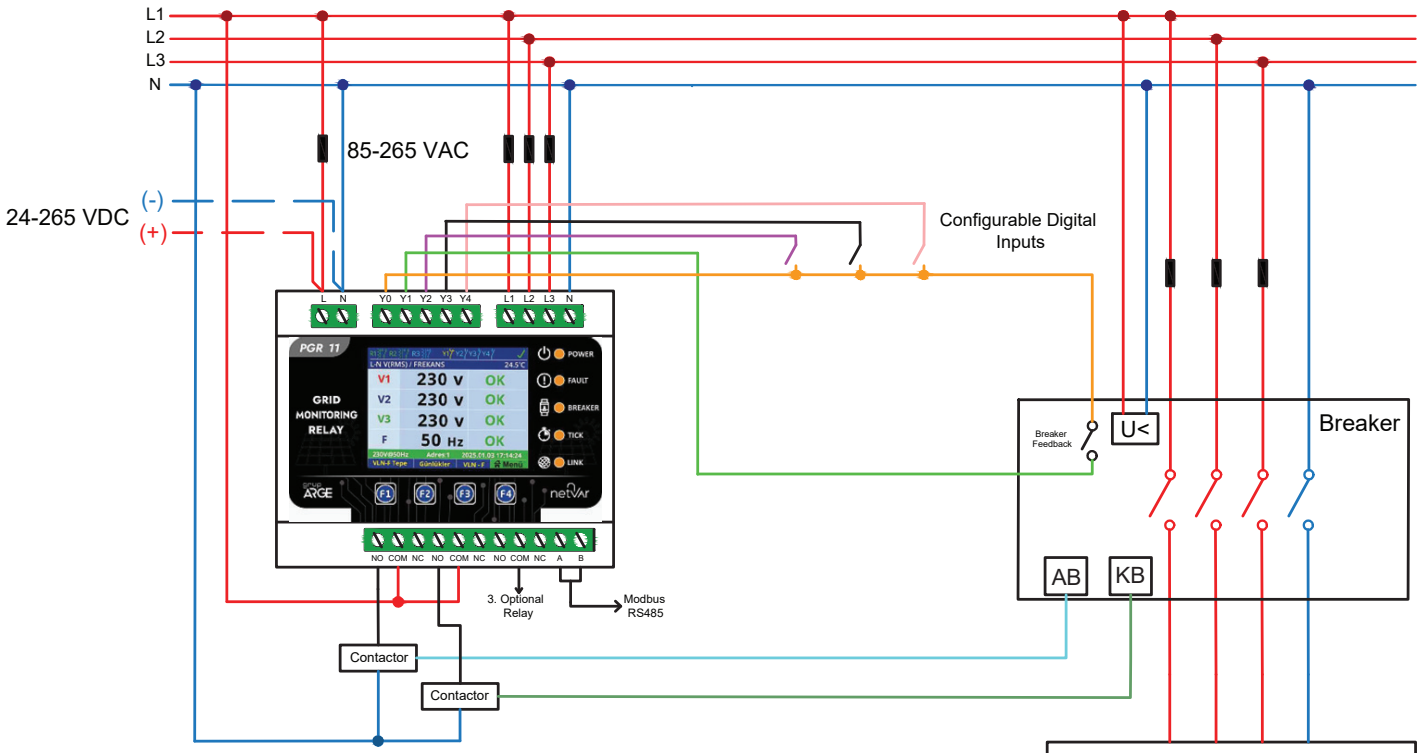

AB: Switching Coil
KB: Shutdown Coil
U<: Low Voltage Coil

COMMERCIAL TITLE

GRUP ARGE ENERJİ ve KONTROL SİSTEMLERİ SAN. TİC. LTD. ŞTİ.

PRODUCT CODE

GA4511

PRODUCT NAME

PGR11

PRODUCT DESCRIPTION

GRID MONITORING RELAY

VERSION : 25.1