Pulse Counter User Manual

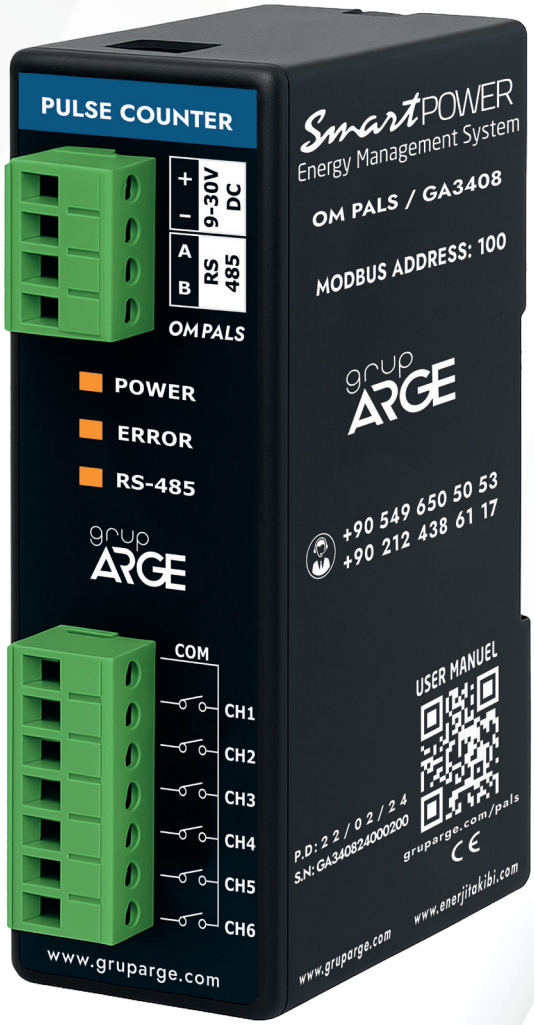

ADDRESS: Ikitelli OSB Mah. Cevre 14. Blok Sok. Telas Blok Dis Kapi No: 1 Kat: 1-2 Basaksehir/Istanbul

Phone: +90 212 438 80 24
Fax: +90 212 438 80 25

info@gruparge.com

V.25.1

CONTENTS

PROPER USE AND SAFETY REQUIREMENTS 3
1. INTRODUCTION 4
1.1. General Features 4
1.2. Technical Features 4
1.3. Technical Drawing 4
1.4. Connection Diagrams 5
2. MODBUS MAP 5
2.1. Modbus Map 5
2.2. Communication Parameters 7
2.3. Modbus Speed 7

PROPER USE AND SAFETY REQUIREMENTS

Cut all the power when connecting and disconnecting the device to a panel.

Do not clean the device with a solvent or similar material. Only use a dry cloth.

Please do not intervene to the device when a technical problem is encountered and get in contact with a technical service within the shortest time.

If the warnings are not taken into account, our company or the authorized dealer shall not be held responsible for the negative consequences.

Do not dispose in the trash, the device must be delivered to the collection centers (electronic device recycling centers). It should be recycled or disposed of without harming human health and environment.

The installation, assembly, activation and operation of the device should be done and used by only expert professionals and in accordance with safety regulations and instructions.

1. INTRODUCTION

1.1. General Features

The pulse counter, with its 6 counter inputs, counts and records the pulse output counters simultaneously and individually. Data can be read and edited over the standard Modbus RTU protocol using the RS-485 communication channel.

1.2. Technical Features

- Microprocessor based.
- **Supply Voltage:** 9-30 V DC.
- **Communication Protocol:** RS-485 / Modbus RTU.
- **Pulse Input:** 6 pcs
- **LED Status:** It has power, error and RS-485 communication LED
- **Ambient Temperature:** -10 °C /+55 °C.
- **Supply Consumption Power:** < 1 VA.
- **Protection Class:** IP40.

1.3. Technical Drawing

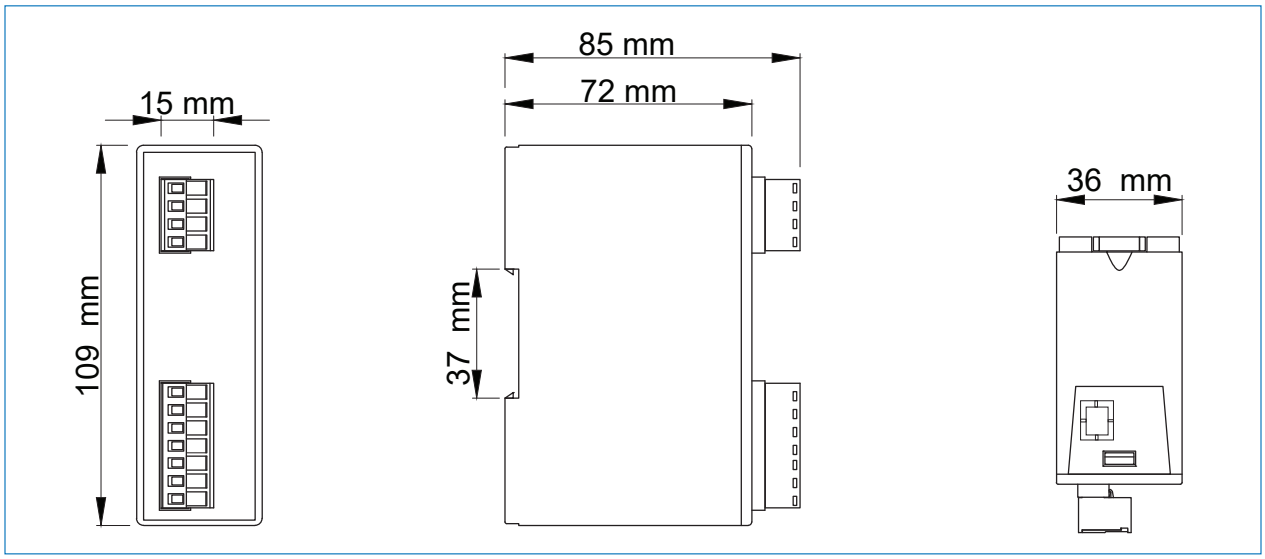

1.4. Connection Diagram

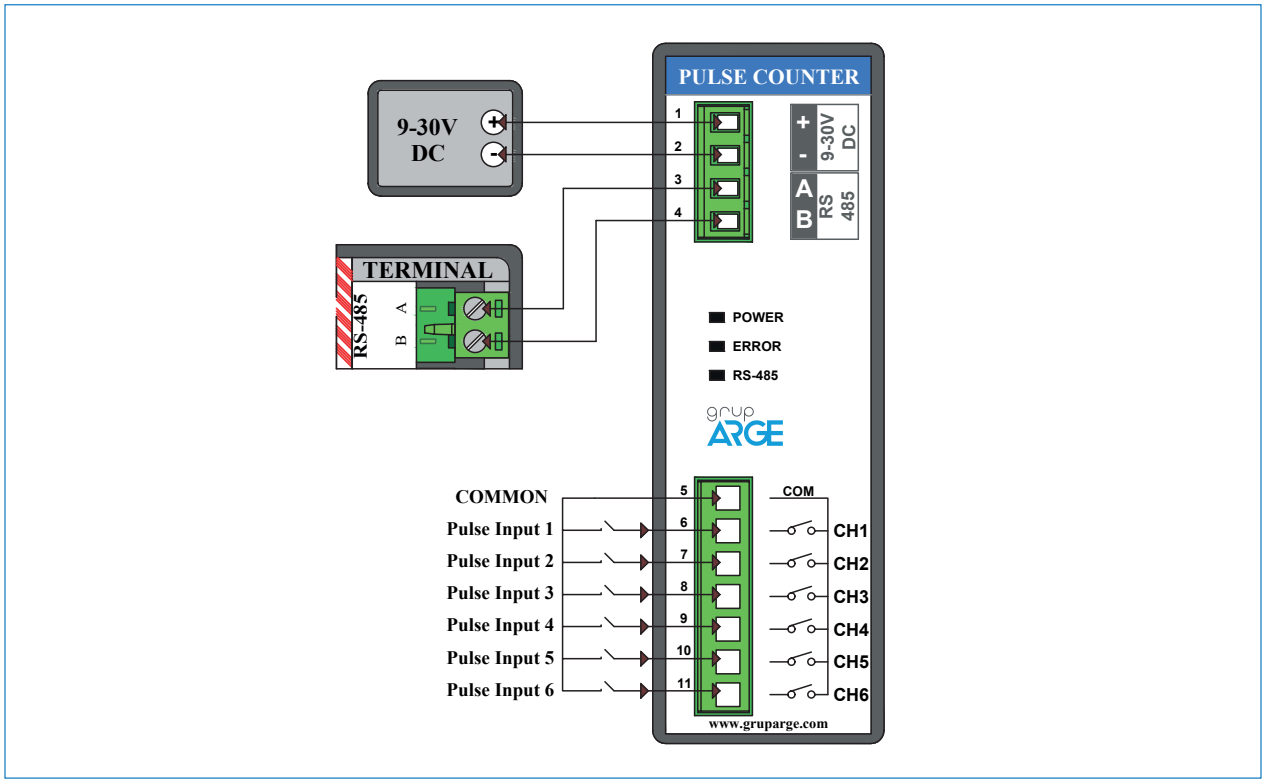

It is recommended to select the cable for RS-485 communications according to the table below.

Cable Distance	Recommended Cable	Alternative Recommendation
Up to 30 m	3*0,22 Shielded and Twisted Signal Cable	CAT-5 Ethernet Cable
Over 30 m	3*0,50 Shielded and Twisted Signal Cable	CAT-6 Ethernet Cable

2. MODBUS MAP

2.1. Modbus Map

- The parameters that the user can read, write and clear are shown in the table below. In the R/W/C column in the table;
- R→ The parameter can be read,
- W→ The parameter can be wrote,
- C → Indicates that the parameter can be cleared.

NOTE: A parameter can have more than one property at the same time.
E.g; R/W in column If written, it indicates that the parameter can be both read and written.

MODBUS MAP					
PULSE COUNTER					
Device Information	Address	Multiplier	Unit	Type	W/R
Input Register					
Serial Number (High)	998	1	-	uint16	R
Serial Number (Low)	999	1	-	uint16	R
Holding Register					
Serial Number (High)	100	1	-	uint16	R
Serial Number (Low)	101	1	-	uint16	R
Product (Type, Subtype)	102	1	-	uint16	R
Application Version (Main, Sub)	103	1	-	uint16	R
Hardware (0, Type)	104	1	-	uint16	R
Hardware Version (Main, Sub)	105	1	-	uint16	R
Parameter Version	106	1	-	uint16	R
System Version (Main, Sub)	107	1	-	uint16	R

Parameter	Address	W/R	Type	Unit	Min	Max	Default	Step
Second	**200**	W/R	Uint 16	sec	0	59	0	1
Minute	**201**	W/R	Uint 16	min	0	59	0	1
Hour	**202**	W/R	Uint 16	hour	0	24	0	1
Day	**203**	W/R	Uint 16	-	1	31	0	1
Month	**204**	W/R	Uint 16	-	1	12	0	1
Year	**205**	W/R	Uint 16	-	0	99	0	1
Modbus Address (Table-1)	**206**	W/R	Uint 16	-	1	254	1	1
Modbus Speed (Table-2)	**207**	W/R	Uint 16	-	0	4	3	1
Channel_1 (High)	**211**	W/R	Uint 16	-	0	65535	0	1
Channel_1 (Low)	**212**	W/R	Uint 16	-	0	65535	0	1
Channel_2 (High)	**213**	W/R	Uint 16	-	0	65535	0	1
Channel_2 (Low)	**214**	W/R	Uint 16	-	0	65535	0	1
Channel_3 (High)	**215**	W/R	Uint 16	-	0	65535	0	1
Channel_3 (Low)	**216**	W/R	Uint 16	-	0	65535	0	1
Channel_4 (High)	**217**	W/R	Uint 16	-	0	65535	0	1
Channel_4 (Low)	**218**	W/R	Uint 16	-	0	65535	0	1
Channel_5 (High)	**219**	W/R	Uint 16	-	0	65535	0	1
Channel_5 (Low)	**220**	W/R	Uint 16	-	0	65535	0	1
Channel_6 (High)	**221**	W/R	Uint 16	-	0	65535	0	1
Channel_6 (Low)	**222**	W/R	Uint 16	-	0	65535	0	1
Channel_1 Waiting Time	**300**	W/R	Uint 16	ms	0	65535	5	1
Channel_2 Waiting Time	**301**	W/R	Uint 16	ms	0	65535	5	1
Channel_3 Waiting Time	**302**	W/R	Uint 16	ms	0	65535	5	1
Channel_4 Waiting Time	**303**	W/R	Uint 16	ms	0	65535	5	1
Channel_5 Waiting Time	**304**	W/R	Uint 16	ms	0	65535	5	1
Channel_6 Waiting Time	**305**	W/R	Uint 16	ms	0	65535	5	1

Address	Command		W/R
1500	Restart Device	0xAA55	43605
1501	Back to Default Settings	0xAA55	43605

2.2. Communication Parameters

Baudrate	9600 bps
Data Bits	8
Parity	None
Stop Bits	1

NOTE: The default Modbus address is the number obtained by adding 100 to the last two digits of the serial number of the device. For example, suppose the serial number is 185247. Since it ends with 47, Modbus address becomes 147.

2.3. Modbus Speed

Modbus speed is determined by indexes between 0-4.The table below contains Modbus speeds according to the indexes. By adjusting the Bus Speed part of the Modbus map, the desired speed can be obtained from the table below.

Index	0	1	2	3	4
Modbus Speed (Bps)	1200	2400	4800	9600	19200