Optical Reader
User Manual

ADDRESS: Ikitelli OSB Mah. Cevre 14. Blok Sok. Telas Blok Dis Kapi No: 1 Kat: 1-2 Basaksehir/Istanbul

Phone: +90 212 438 80 24
Fax: +90 212 438 80 25

info@gruparge.com

V.25.1

CONTENTS

PROPER USE AND SAFETY REQUIREMENTS 3
1. INTRODUCTION 4
1.1. General Features 4
1.2. Technical Features 4
1.3. Technical Drawing 4
1.4. Connection Diagram 5
1.4.1. GSM Automation Terminal - Optical Reader Connection Diagram 5
1.4.2. Ethernet Terminal - Optical Reader Connection Diagram 5

PROPER USE AND SAFETY REQUIREMENTS

Cut all the power when connecting and disconnecting the device to a panel.

Do not clean the device with a solvent or similar material. Only use a dry cloth.

Please do not intervene to the device when a technical problem is encountered and get in contact with a technical service within the shortest time.

If the warnings are not taken into account, our company or the authorized dealer shall not be held responsible for the negative consequences.

Do not dispose in the trash, the device must be delivered to the collection centers (electronic device recycling centers). It should be recycled or disposed of without harming human health and environment.

The installation, assembly, activation and operation of the device should be done and used by only expert professionals and in accordance with safety regulations and instructions.

1. INTRODUCTION

1.1. General Features

The Optical Reader is designed to enable data exchange with electronic meters by communicating via the IEC1107 (IEC62056-21) protocol.

The optical reader is used so that GSM or Ethernet-based modems used for communication with meters can read data from the meters.

The optical reader must be positioned so that the arrow on it points upward, aligned with the metal surface on the optical port of the electricity meter.

1.2. Technical Features

- **Communication Protocol:** IEC1107 (IEC62056-21).
- **Cable Cross-Section and Length:** 4 x 0.22 mm², 2.5 m
- **Operating Temperature:** -10 ˚C / +55 ˚C
- **Magnet:** Neodymium Magnet.
- **Connection Type:** Terminal Connection.
- **Weight:** 100 gr (with cable).
- **Mounting:** Mounting on the metal surface of the optical port.
- **Protection Class:** IP20.
- **Max. Connection Speed:** 19200 bps.

1.3. Technical Drawing

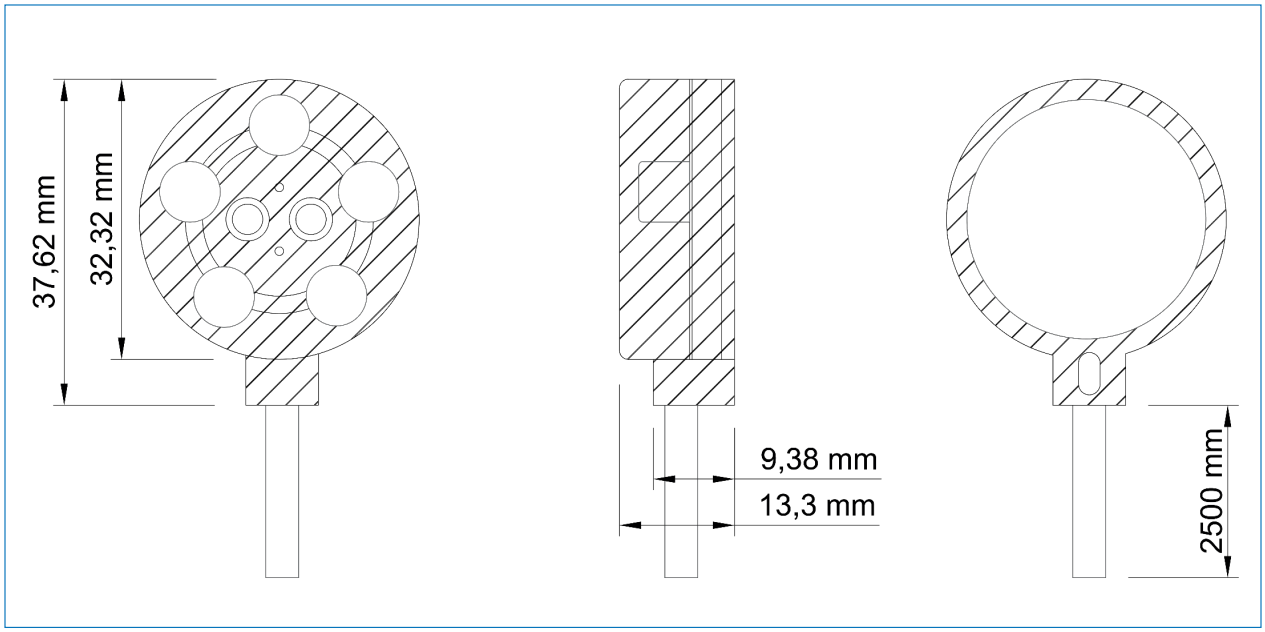

1.4. Connection Diagram

1.4.1. GSM Automation Terminal - Optical Reader Connection Diagram

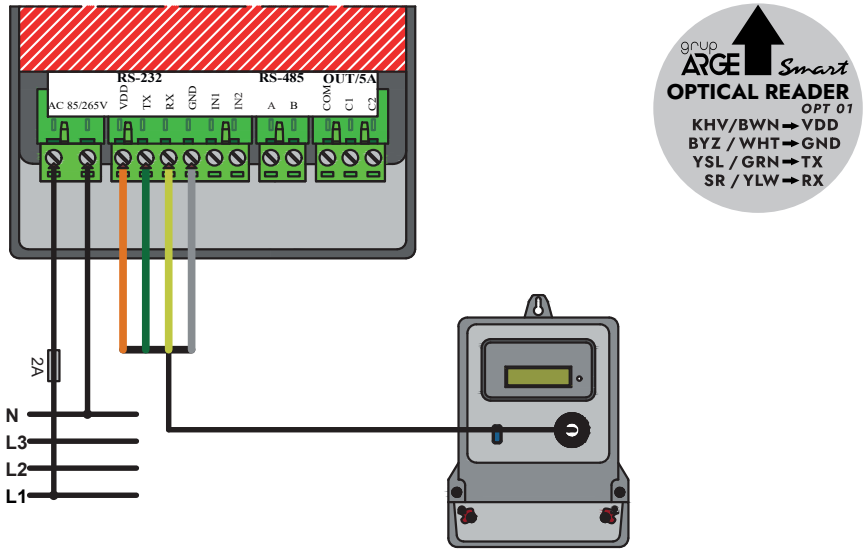
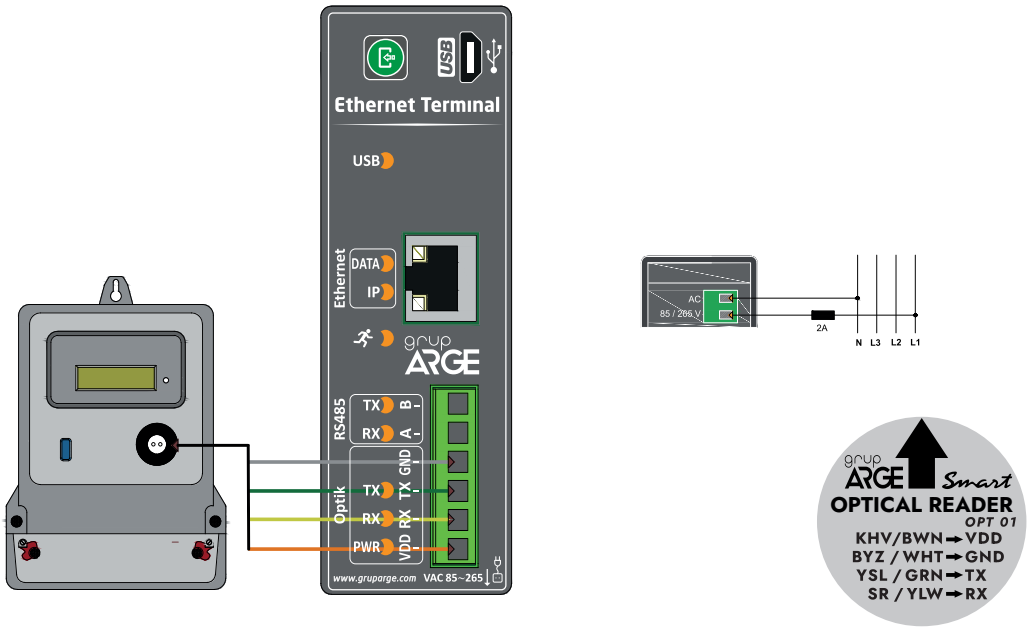
1.4.2. Ethernet Terminal - Optical Reader Connection Diagram