GSM and 4G Automation Terminals User Manual



ADDRESS: Ikitelli OSB Mah. Cevre 14. Blok Sok. Telas Blok Dis Kapi No: 1 Kat: 1-2 Basaksehir/Istanbul

Phone: +90 212 438 80 24
Fax: +90 212 438 80 25

info@gruparge.com

V.25.1

CONTENTS

PROPER USE AND SAFETY REQUIREMENTS 3
1. INTRODUCTION 4
1.1. General Features 4
1.2. Technical Features 4
1.3. Terminal Connections 5
1.4. GSM and 4G Model Comparison Table 5
2. ASSEMBLY INFORMATION 6
2.1. Assembly Information 6
2.2. How to Use the Authorization Code 6
2.3. Connection Diagrams 7
2.3.1. Input Connection Diagram 7
2.3.2. Output Connection Diagram 7
3. METER COMMUNICATION CONNECTIONS 8
3.1. Optical Port Connection 8
3.2. Makel RS-232 Communication Connection 9
3.3. Makel RS-485 Communication Connection & Köhler RS-485 Communication Connection & Viko RS-485 Communication Connection .. 9
3.4. Elektromed RS-485 Communication Connection & Luna RS-485 Communication Connection 10
3.5. Elster RS-485 Communication Connection 10
3.6. EMH RS-485 Communication Connection 11
3.7. Landis RS-485 Communication Connection 11
4. PFC TERMINAL CONNECTIONS 11
4.1. All PFC Terminal Connections 12
4.2. Klemsan Relay REMO-Q and RAPIDUS – Terminal Connections 12
5. SMARTPOWER ENERGY MONITORING SYSTEM 13
5.1. Device Monitoring and Configuration via Web Interface 13
6. TECHNICAL DRAWING 18

PROPER USE AND SAFETY REQUIREMENTS



Cut all the power when connecting and disconnecting the device to a panel.



Do not clean the device with a solvent or similar material. Only use a dry cloth.



Please do not intervene to the device when a technical problem is encountered and get in contact with a technical service within the shortest time.



If the warnings are not taken into account, our company or the authorized dealer shall not be held responsible for the negative consequences.



Do not dispose in the trash, the device must be delivered to the collection centers (electronic device recycling centers). It should be recycled or disposed of without harming human health and environment.



The installation, assembly, activation and operation of the device should be done and used by only expert professionals and in accordance with safety regulations and instructions.

1. INTRODUCTION

1.1. General Features

HT G21 GSM Automation Terminal and HT G24 4G Automation Terminal are products developed for remote monitoring of electronic electricity meters.They communicate with electricity meters via optical ports, RS-232 (3-wire), or RS-485 (2-wire) communication interfaces.

HT G22/G23 GSM Automation Terminal and HT G25/G26 4G Automation Terminal are designed for the remote monitoring of devices such as power factor controllers and energy analyzers that support the MODBUS protocol. Communication with these devices is typically established via the RS-485 port.
HT G21/G22/G24/G25 models operate with a power supply of 85–265 V AC; HT G23/G26 models operate with a 10–30 V DC power supply.

To enable internet connectivity, communication terminals require a SIM card with 100 MB data capabilities at least . If the SIM card has a PIN code, it must be inserted into a mobile phone and the PIN code must be disabled.

HT G21/G22/G23 GSM Automation Terminals query the connected devices and transmit the data via the GSM network (cellular network), HT G24/G25/G26 4G Automation Terminals transmit the data to the Grup Arge servers using the 4G network (if available) or fallback to GSM.By logging into your user account at www.enerjitakibi.com, you can access all device data via the web interface.

The main reports provided by the web interface include:
• Active energy consumption reports
• Reactive power ratio reports
• Instantaneous electrical parameters (e.g., current, voltage)
• Step values (Only for Power Factor Controller)
In certain alarm conditions, the system can notify relevant personnel via email or SMS alerts.

1.2. Technical Features

- Microprocessor based.
- HT G21/G22/G24/G25 models detect power outages and report them to the central system. (Note: HT G23/G26 models do not support this feature.)
- Models with AC supply (HT G21/G22/G24/G25) support an input voltage range of 85–265 V AC.
- Models with DC supply (HT G23/G26) support an input voltage range of 10–30 V DC.
- Supports communication interfaces including RS-485 (Standard Modbus RTU protocol), RS-232, and optical ports.
- Compatible with all meters supporting the TS EN 62056-21 protocol.
- Can read up to 32 meters via RS-232, and up to 247 Modbus devices via RS-485.

- Equipped with LED indicators for RS-485/Optical/RS-232 (Communication), Output, Input, GSM connection, and Internet status.
- Data transmission interval is configurable between 1 to 240 minutes.
- Operates without requiring a static IP address.
- Includes 2 dry contact digital inputs and 2 relay outputs (5 A each).
- Supports external antenna option for areas with weak network signal.
- Fully compatible with M2M data SIM cards from all GSM operators.
- Operating temperature range: –10 °C to +55 °C.
- Power consumption: less than 1 VA.
- IP40 enclosure protection rating.
- Device dimensions (Width x Height x Depth): 90 x 57 x 160 mm.

1.3. Terminal Connections

SIM Card	**SIM Card Slot**	
Antenna	GSM Antenna Connector (SMA)	
USB	Type-B USB Input (For Configuration)	
AC 85/265 V	AC Power Input	
VDD	Optical Reader Power Supply (6.2 V DC)	
RS-232	**TX**	Optical/RS-232 Data Transmit
	RX	Optical/RS-232 Data Receive
	GND	Optical/RS-232 Ground
IN 1	Dry Contact Monitoring Input -1	
IN 2	Dry Contact Monitoring Input -2	
RS-485	**A**	RS-485 Data +
	B	RS-485 Data -
COM	Relay Common Terminal	
OUT/5A	**C 1**	Röle Output -1
	C 2	Röle Output -2

Table 1.1

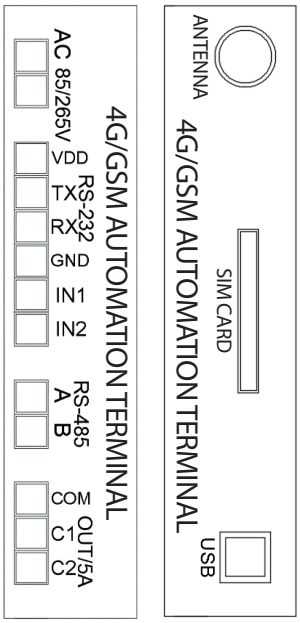

Figure 1.1

WARNING! Do NOT supply power to the VDD, TX, RX, GND, IN1, IN2, A, B terminals.

1.4 GSM and 4G Model Comparison Table

Product Code	Product Name	Product Description	Comm-unication	Supply Type	Protocol
GA3121	HT G21	GSM AUTOMATION TERMINAL (METER)	2G	AC	Meter
GA3122	HT G22	GSM AUTOMATION TERMINAL (MODBUS)	2G	AC	Modbus
GA3123	HT G23	GSM AUTOMATION TERMINAL (MODBUS)-DC	2G	DC	Modbus
GA3124	HT G24	4G AUTOMATION TERMINAL (METER)	4G	AC	Meter
GA3125	HT G25	4G AUTOMATION TERMINAL (MODBUS)	4G	AC	Modbus
GA3126	HT G26	4G AUTOMATION TERMINAL (MODBUS)-DC	4G	DC	Modbus

2. ASSEMBLY INFORMATION

2.1. Assembly Information

1. Secure the device at a suitable position inside the panel.
2. Loosen the terminal cover screw and remove the cover.
3. For AC-supplied models, connect the power cable to the terminal labeled “AC 85/265 V”. For DC-powered models, use the terminal labeled “DC 10–30 V”. Ensure that the cables are not energized during this process.
4. Make the communication connection with the target device as follows:
   a. Electric Meter / Optical Port: (Figure 3.1)
   b. Electric Meter / RS-232: (Figure 3.3)
   c. Electric Meter / RS-485: (Figures 3.4, 3.5, 3.6, 3.7, 3.8, 3.9)
   d. Modbus Device (PFC, Analyzer, etc.) / RS-485: (Figures 4.1 and 4.2)
5. Disable the SIM card’s PIN code and insert the SIM card into the slot as illustrated on the device.
5. After verifying all connections, energize the device to begin operation.
6. After a short period, log into the Smart Power Energy Monitoring System to confirm whether the device has begun data transmission.If internet access is unavailable at the installation site, you may contact technical support for assistance.

NOT

1. If GSM signal strength is weak, replace the default antenna with a wired external antenna.
2. If multiple energy meters are to be connected over RS-485, contact technical support to register meter serial numbers in the system.
3. Modbus devices communicating over RS-485 must have unique modbus addresses assigned to each device.
4. It may be necessary to access the device's menu and change the modbus address accordingly

2.2. How to Use the Authorization Code

1. Log into the SmartPower Energy Monitoring System and navigate to the "Modem" page.
2. Click the "Add Modem Authorization" button and enter the information found on the “Authorization Code” card included in the product box.
3. If the information is entered correctly, the device will be automatically assigned to your account.
4. After completing the process, dispose of the authorization code card securely.

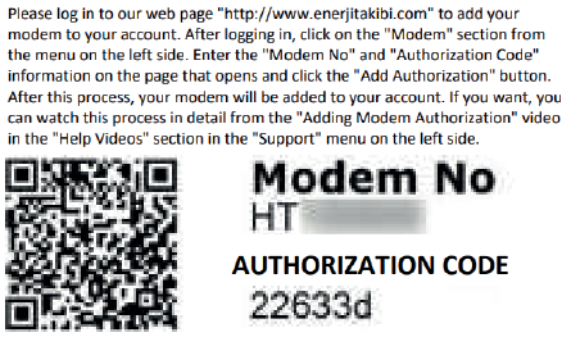

Figure 2.1

2.3. Connection Diagrams

2.3.1. Input Connection Diagram

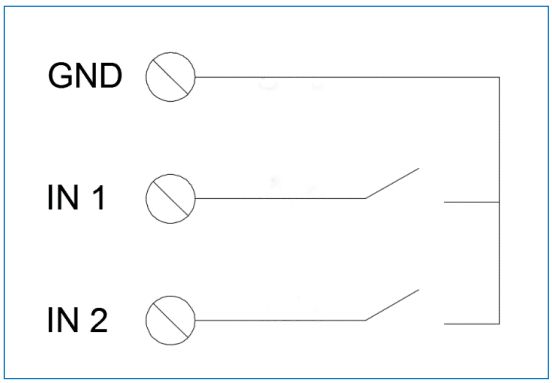

Figure 2.2

- GND is used as the common terminal for the input connections.
- When the dry contact connected to IN 1 is closed, the IN 1 LED will turn on.
- When the dry contact connected to IN 2 is closed, the IN 2 LED will turn on.

NOTE:If the modem's digital input/output features are to be used, enter the modem settings via the web interface and ensure the "I/O Support Enabled" option is activated.

NOTE :Changes in input states can be monitored via the web interface. Notifications can also be sent to predefined email addresses and SMS recipients.

NOTE :Based on input states, the relay output of another modem can also be automatically controlled. This feature is particularly suitable for well–tank automation systems.

2.3.2. Output Connection Diagram

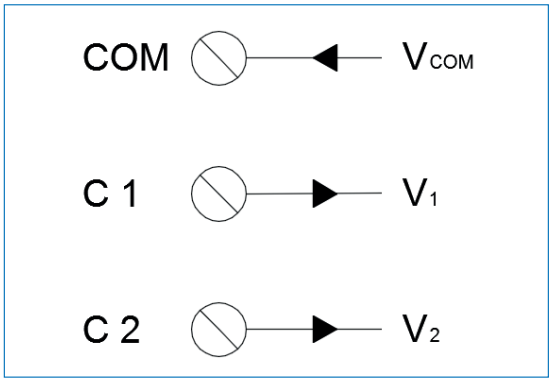

Figure 2.3

- When Relay C1 is active, V_1 = VCOM.
- When Relay C2 is active, V_2 = VCOM.
- VCOM must be less than 250 V.

NOTE

- Loads drawing more than 5A should not be directly connected to relay outputs; they must be driven through a contactor.
- Relay outputs can be controlled manually via the web interface, or automatically based on a user-defined schedule.

Example Applications

AC Motor Control

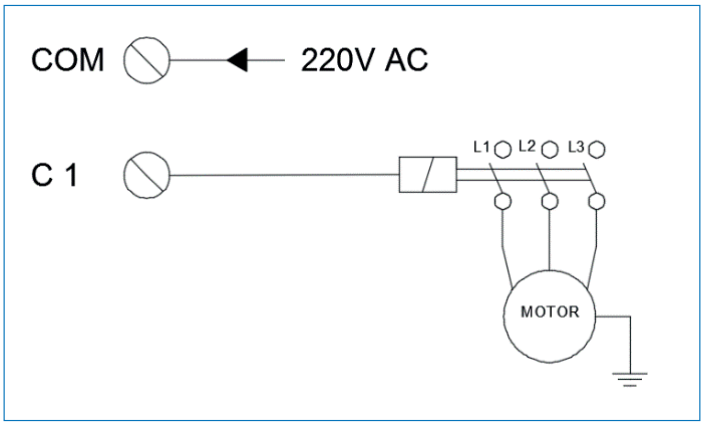

Figure 2.4

Buzzer Control

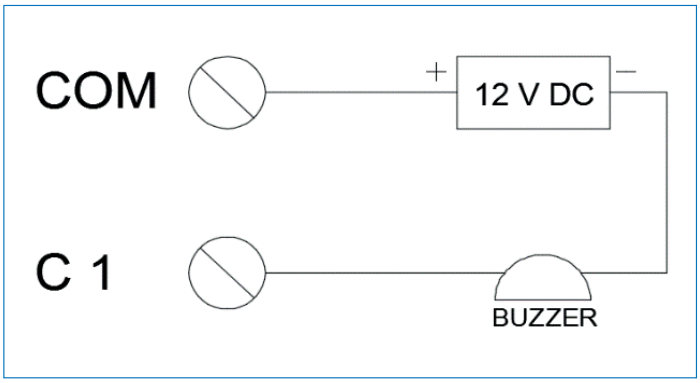

Figure 2.5

3. METER COMMUNICATION CONNECTIONS

3.1. Optical Port Connection

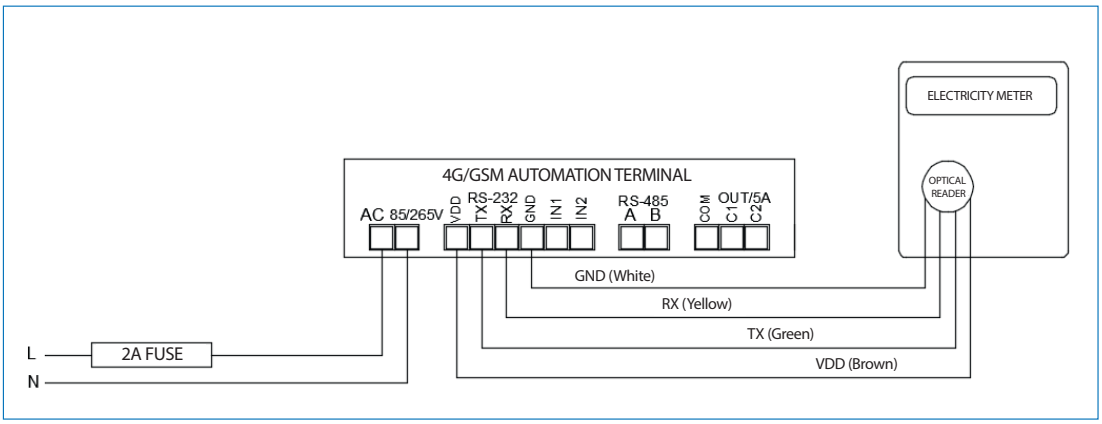

Figure 3.1

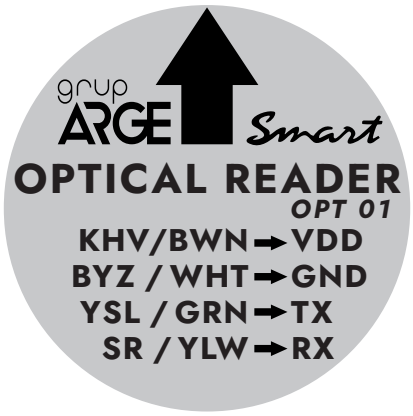

NOTE: When placing the optical reader on the meter, make sure that the arrow on the label points upwards.

Cable Color	Brown	Green	Yellow	White
Terminal	VDD	TX	RX	GND

Table 3.1

3.2. Makel RS-232 Communication Connection

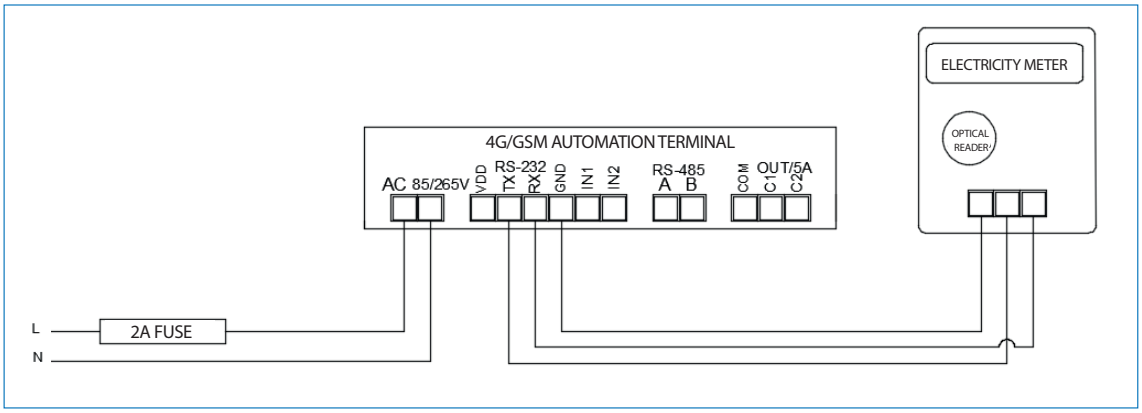

Figure 3.2

3.3. Makel RS-485 Communication Connection & Köhler RS-485 Communication Connection & Viko RS-485 Communication Connection

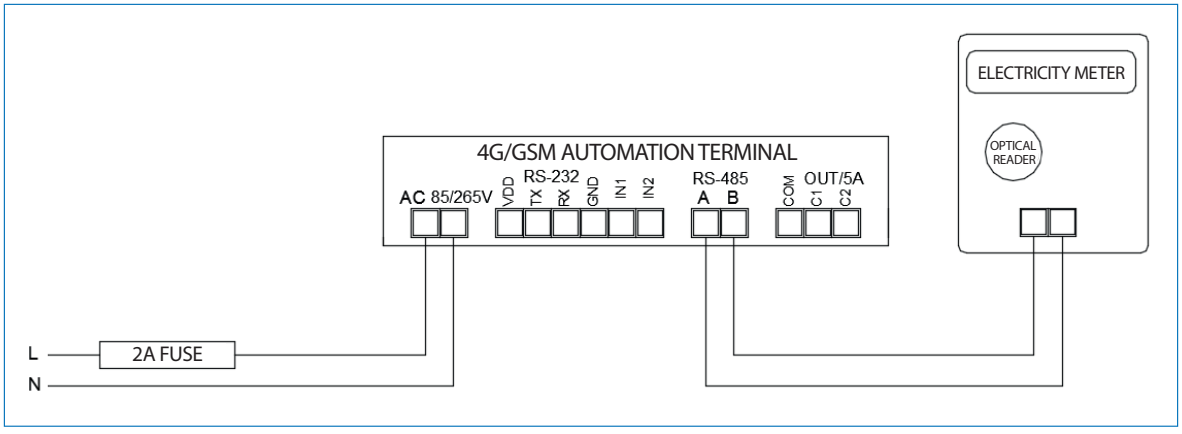

Figure 3.3

3.4. Elektromed RS-485 Communication Connection & Luna RS-485 Communication Connection

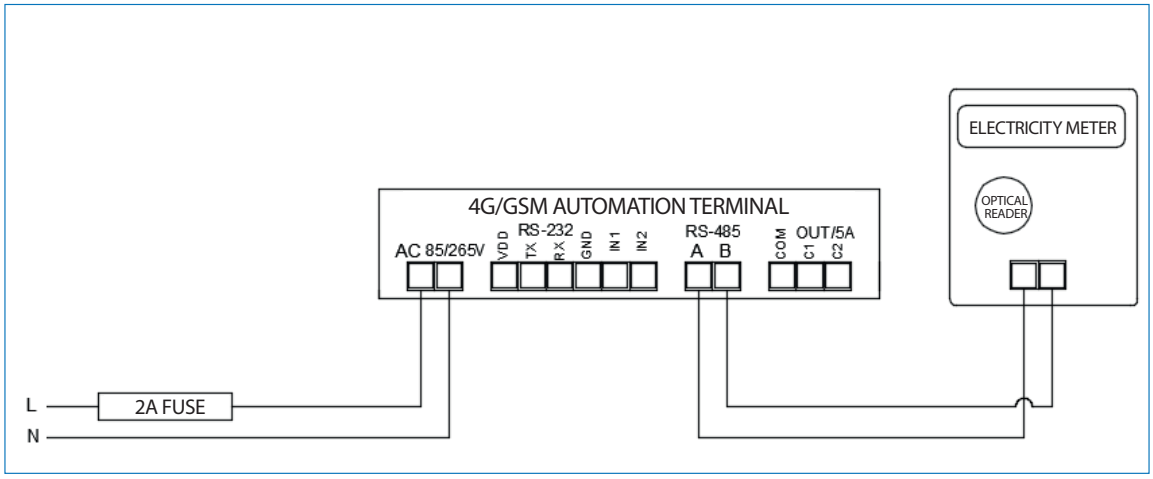

Figure 3.4

3.5. Elster RS-485 Communication Connection

Some models of Elster meters have two RS-485 outputs.

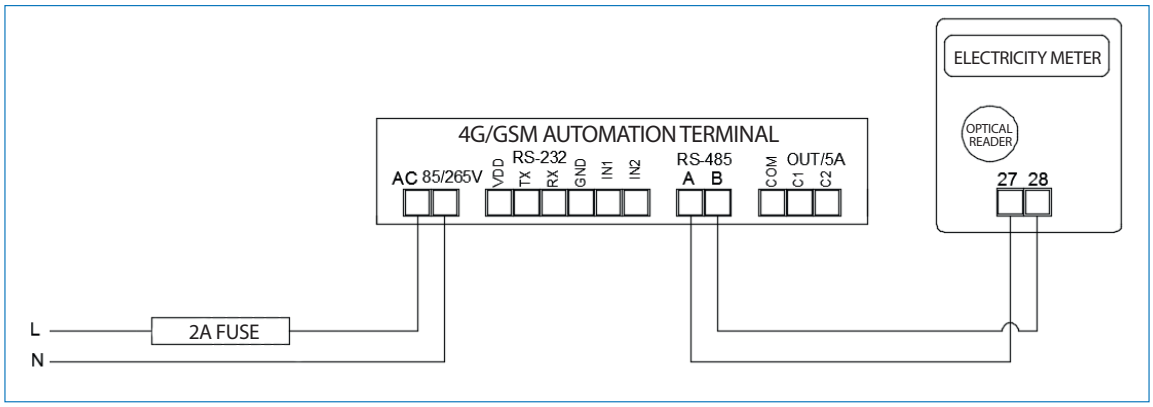

Figure 3.5

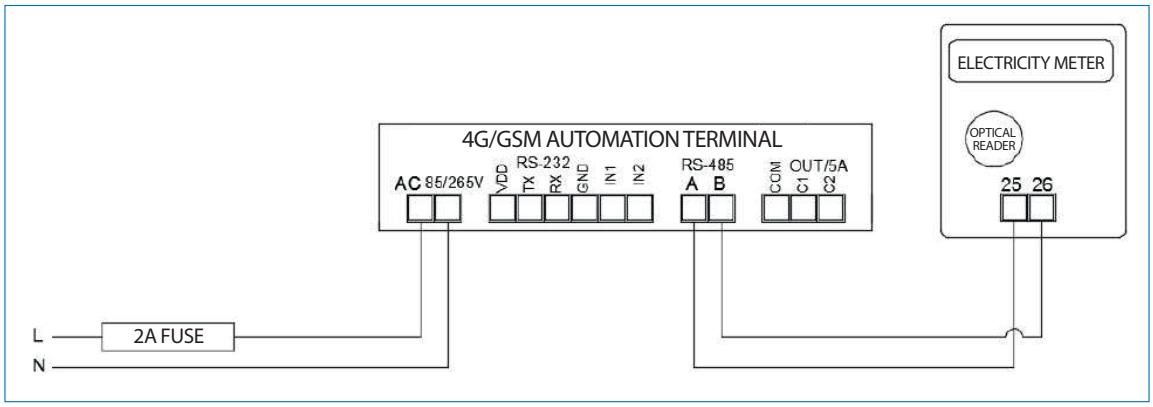

Figure 3.6

3.6. EMH RS-485 Communication Connection

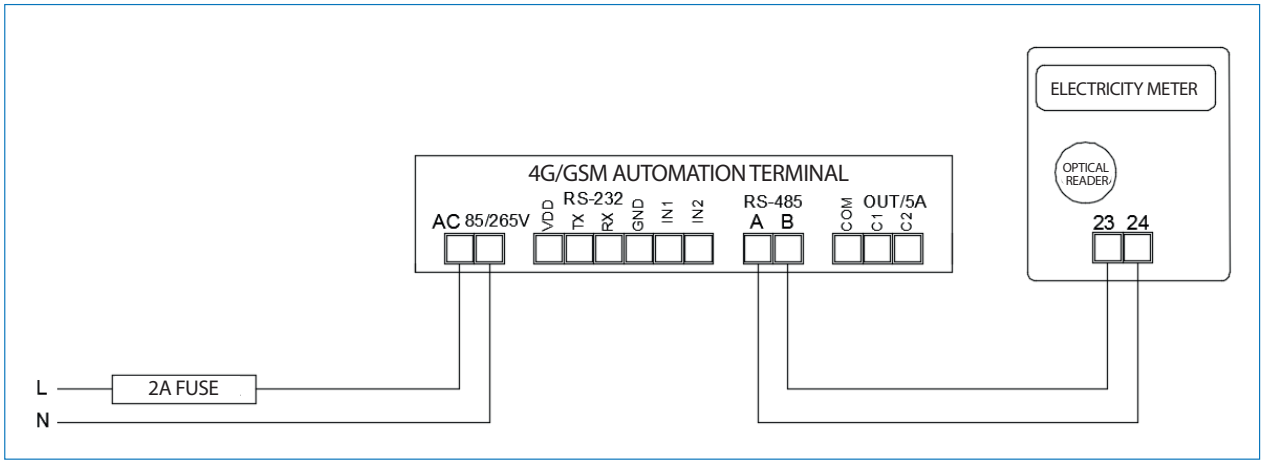

Figure 3.7

3.7. Landis RS-485 Communication Connection

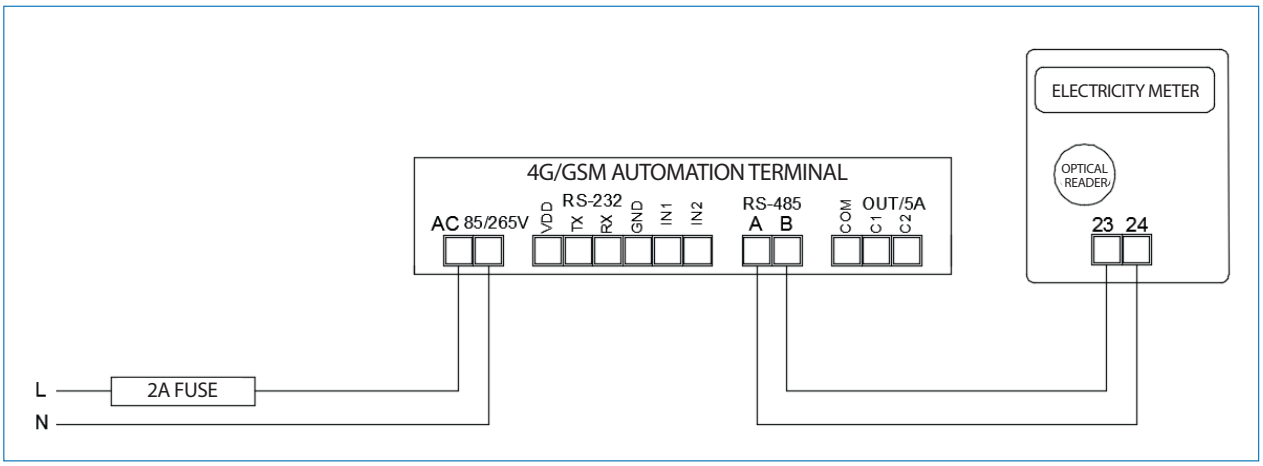

Figure 3.8

NOTE : To enable RS-485 communication with Landis meters, the serial number of the meter must be registered in the system by contacting the technical support service.

4. PFC TERMINAL CONNECTIONS

If the power factor controller or analyzer to be connected to the modem is named as A and B in the communication terminals, A is connected to A and B is connected to B. The connections of the devices using different nomenclature are shown below.

NOTE

• Devices connected to the modem must have their modbus addresses and device types defined via the web interface by accessing the respective modem's configuration page.

• Modbus addresses of non-screen products manufactured by Grup Arge are found

4.1. All PFC Terminal Connections

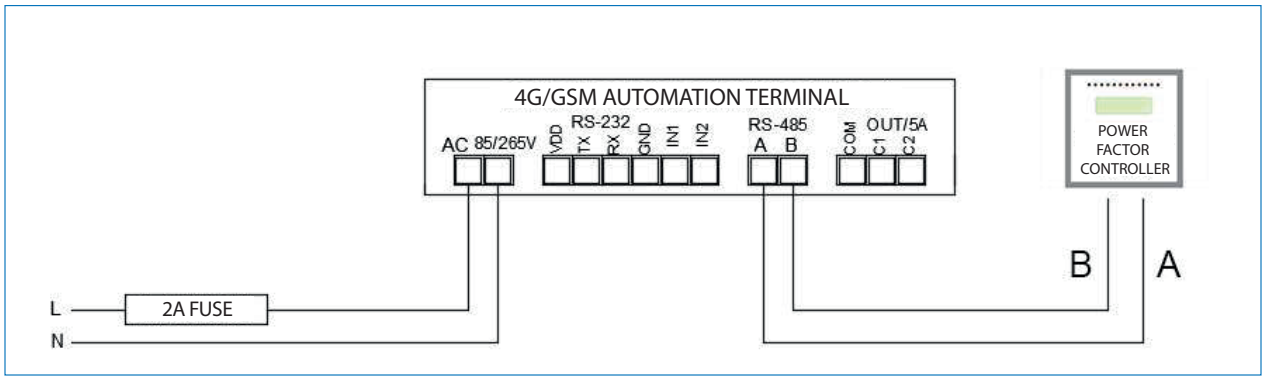

Figure 4.1

4.2. Klemsan Relay REMO-Q and RAPIDUS – Terminal Connections

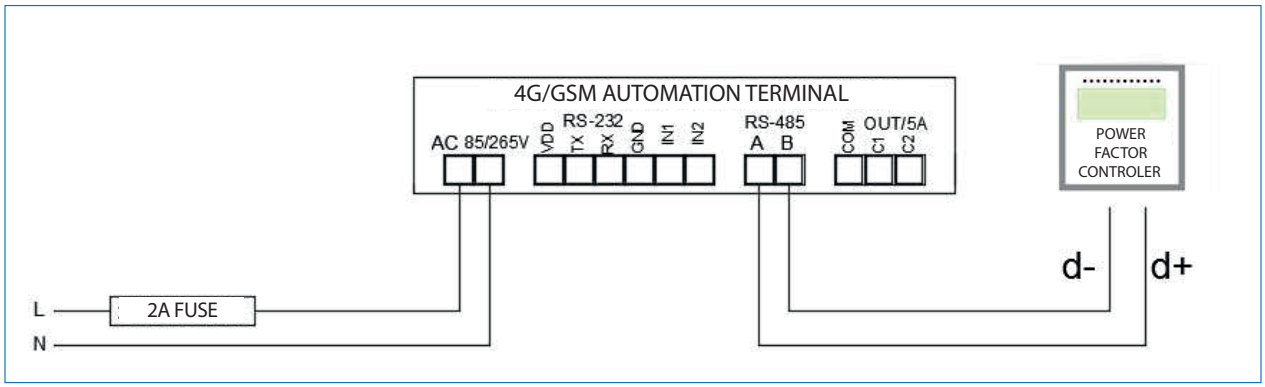

Figure 4.2

For RS-485 communication, we recommend selecting the cable based on the following table: We recommend selecting the cable to be used for RS-485 communication according to the table below.

Cable Distance	Recommended Cable	Alternative Recommendation
Up to 30 m	3*0,22 Shielded and Twisted Signal Cable	CAT-5 Ethernet Cable
Over 30 m	3*0,50 Shielded and Twisted Signal Cable	CAT-6 Ethernet Cable

Table 4.1

5. SMARTPOWER ENERGY MONITORING SYSTEM

5.1. Device Monitoring and Configuration via Web Interface

Once the installation of your device is complete, you can log into the system and start viewing data. If you are accessing the system for the first time, you must contact our technical support team to create a user account. After your user account has been created, log into the system and complete the authorization process for the modem. (Refer to Section 2.2 for details.)
Basic usage instructions for the system are provided step by step below:

1. *Go to www.enerjitakibi.com. The login screen shown in Figure 5.1 will appear.*

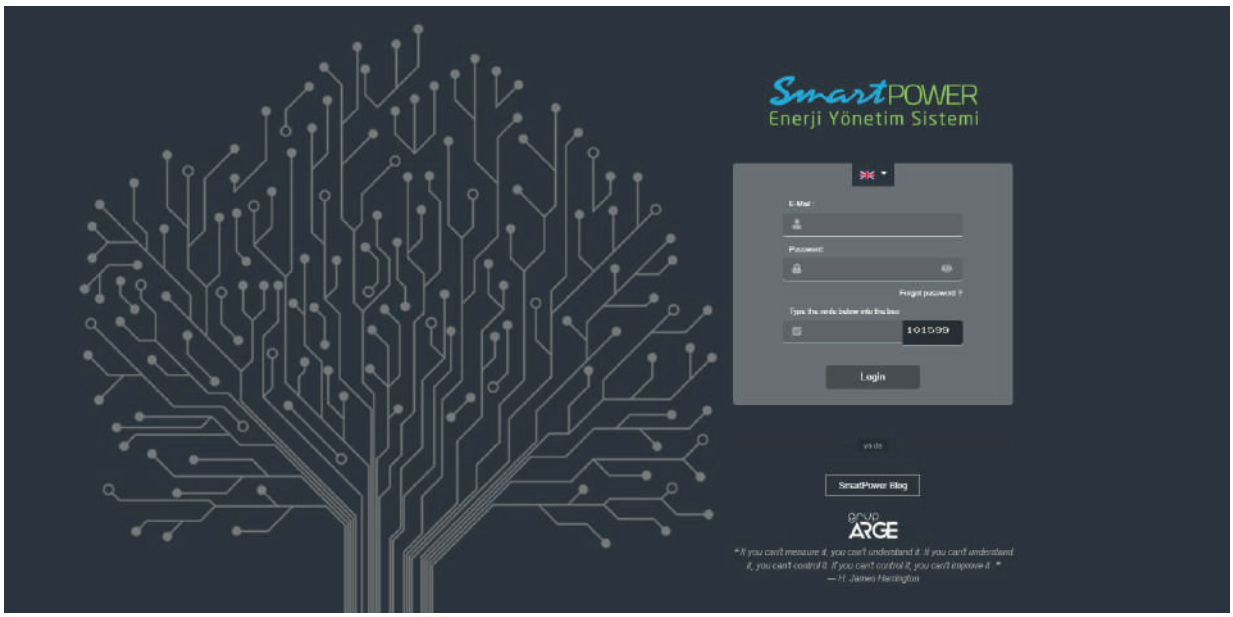

Figure 5.1

2. To obtain your username and password, please contact our technical support team.
3. Once you receive your login credentials, you can access the system.
4. After logging in, the main dashboard will be displayed. (Figure 5.2)

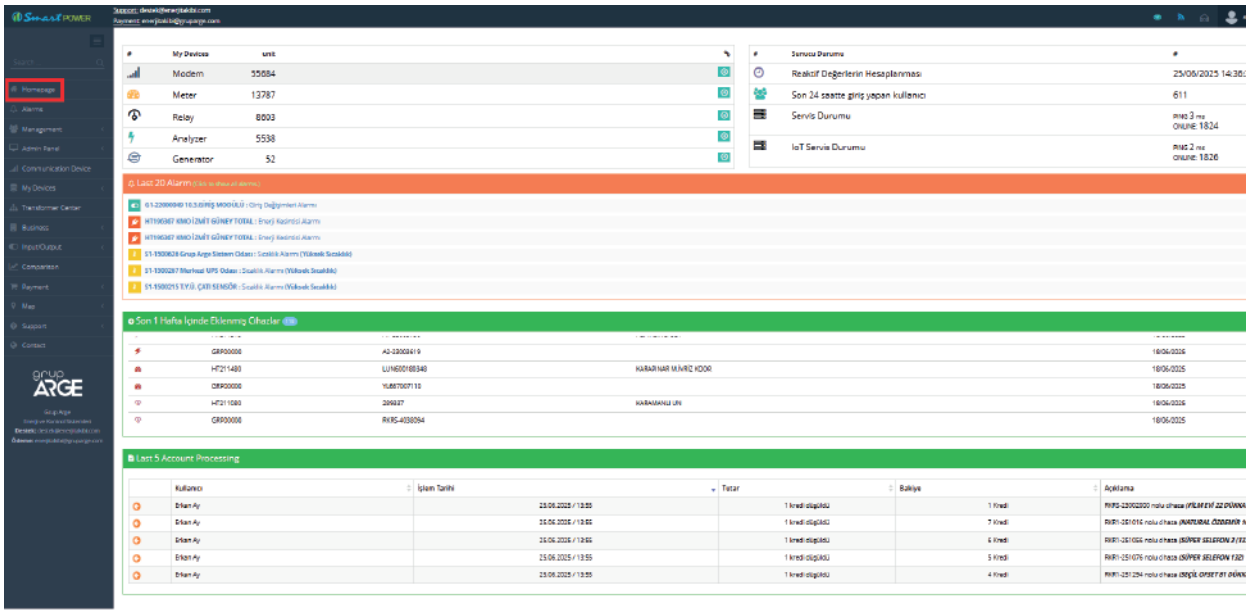

Figure 5.2

5. To add a modem to the system, click the "Modem" menu located on the left side of the page. (Figure 5.3)

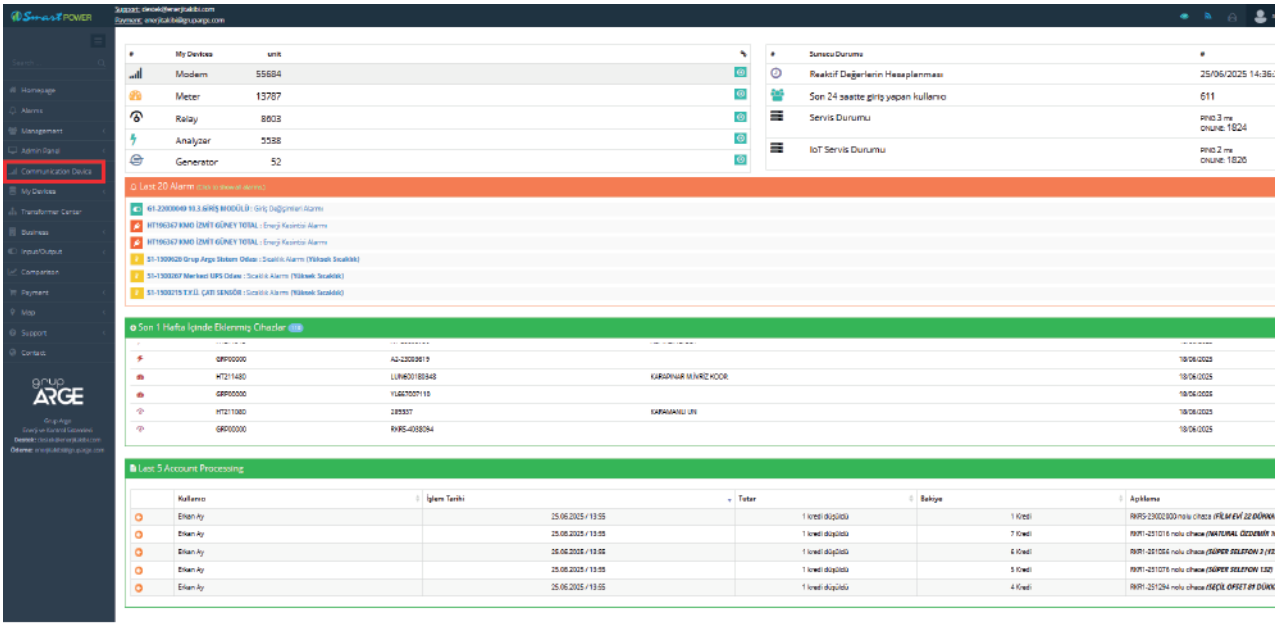

Figure 5.3

6. On the page that opens, click the "Add Modem Authorization" button. (Figure 5.4)

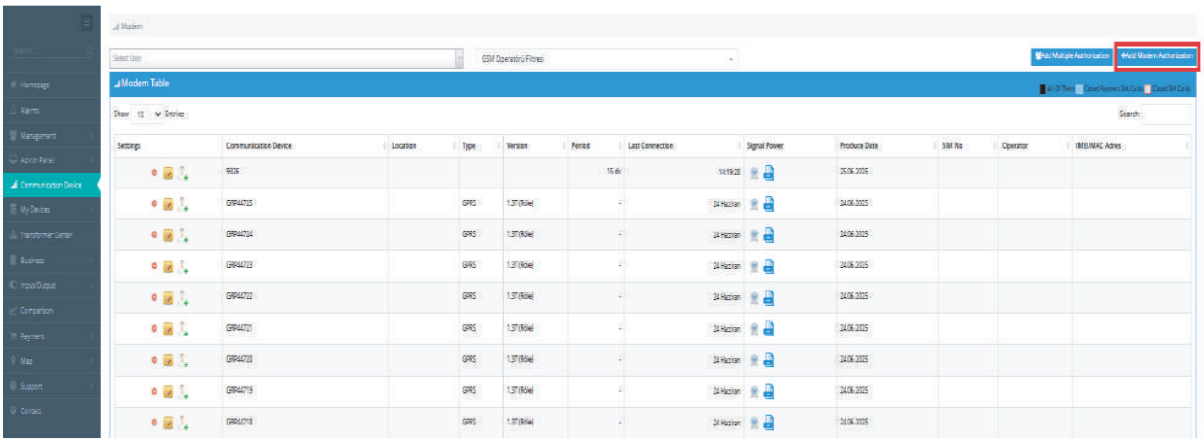

Figure 5.4

7. Enter the "Modem No" and "Authorization Code" information from the authorization card provided in the modem box. This completes the modem registration process in the system. (Figure 5.5)

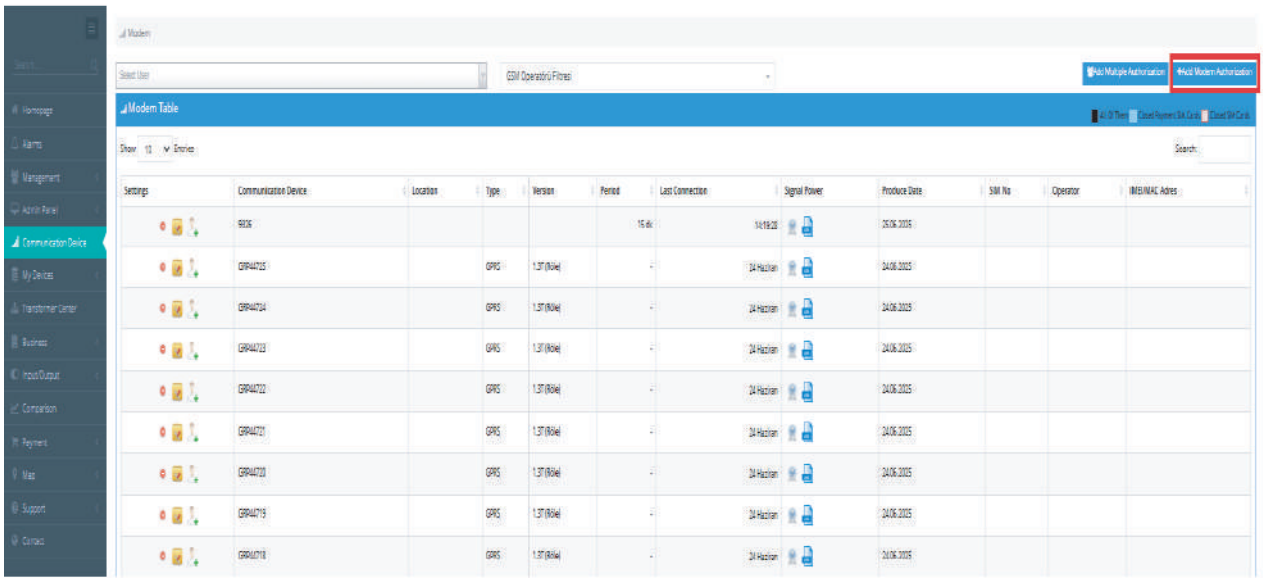

Figure 5.5

8. To view modem settings, click the "Modem" menu on the left panel.
From the modem list that appears, click the "Modem Settings" button for the relevant modem to access its configuration. (Figure 5.6)

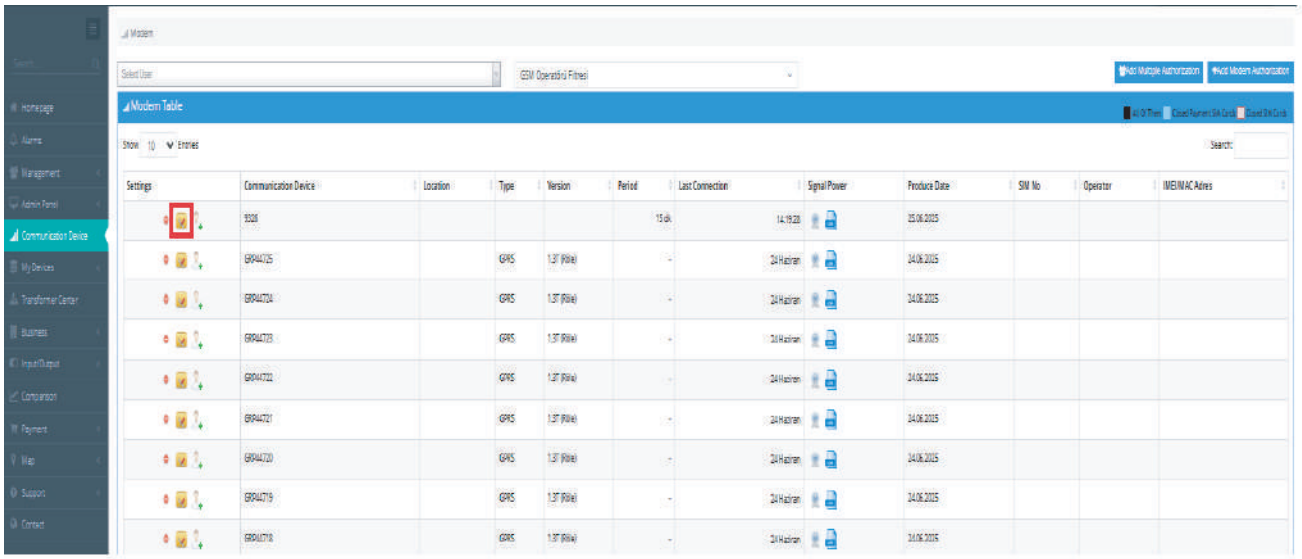

Figure 5.6

9. Click the "Authorization Settings" button to open a screen where you can assign permissions to sub-users you have created. (Figure 5.7)

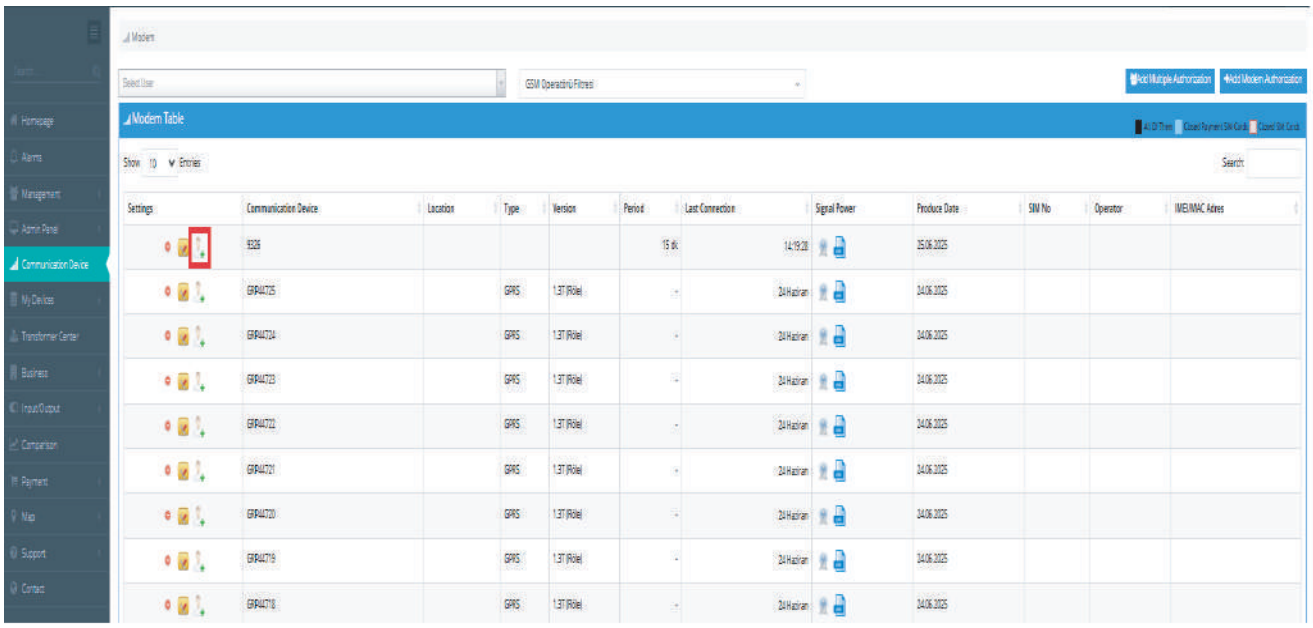

Figure 5.7

10. To create a new user, go to “Administration” → “User” → “Create New User”, fill in the required user information, and create a sub-user account. (Figure 5.8)

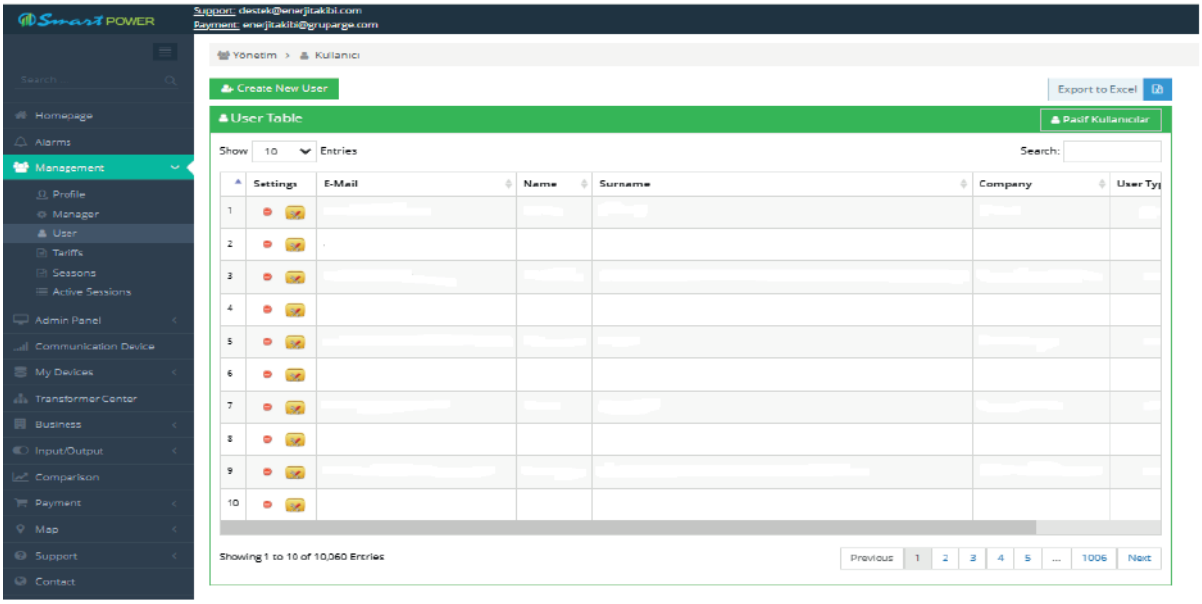

Figure 5.8

11. In the "Modem Settings" section, to quickly identify the company where the device is installed, enter the location information and click the "Save" button.
(Figure 5.9)
For devices such as power factor controller , analyzers, energy meters, temperature/light sensors, and input/output modules, modbus address assignments must be configured.

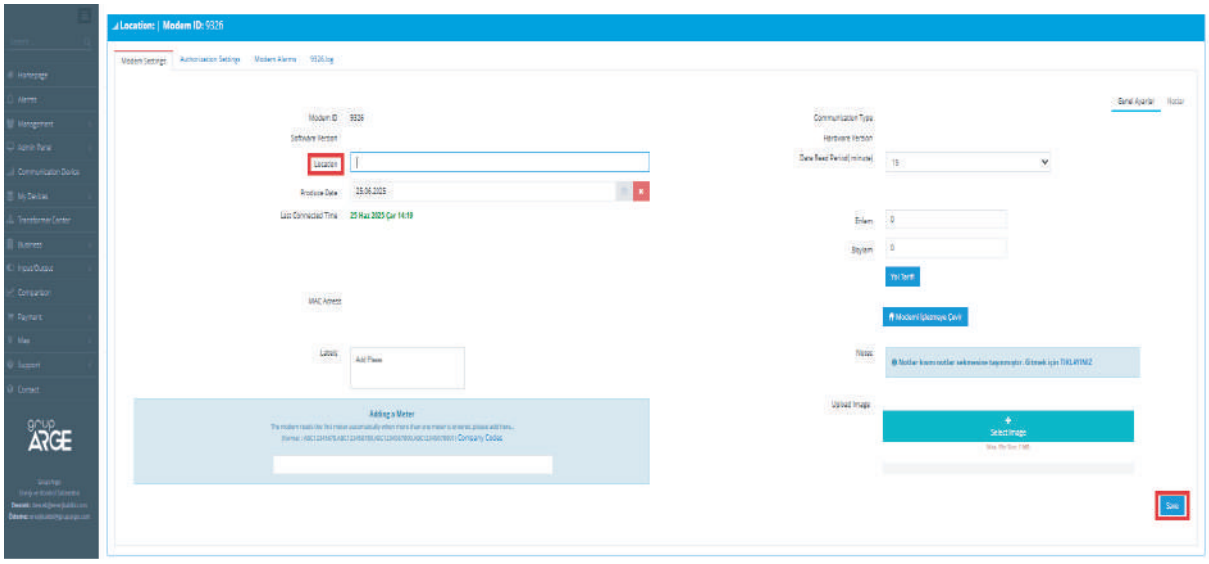

Figure 5.9

NOTE: For more detailed information about the SmartPower Energy Monitoring System, please visit www.enerjitakibi.com and navigate to “Support” → “Help Videos”.

6. TECHNICAL DRAWING

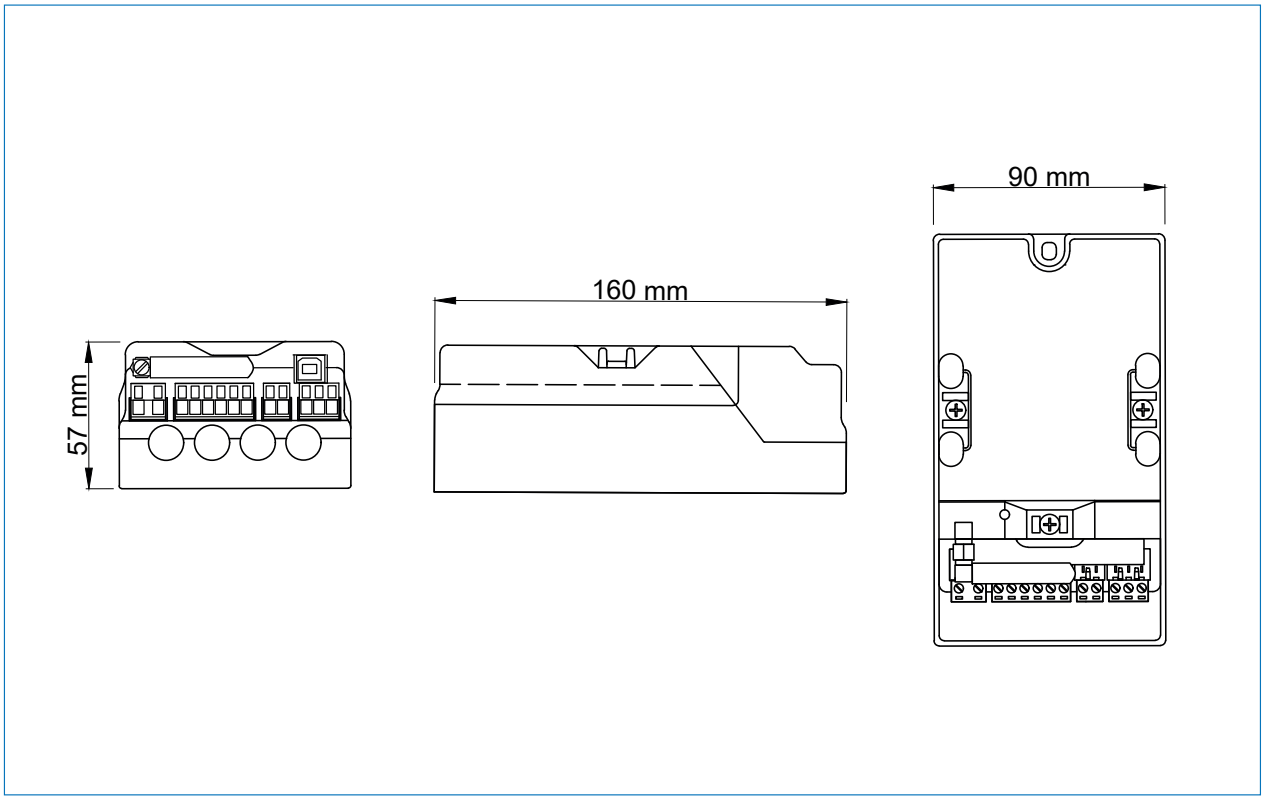

Figure 6.1