SVC Load Drivers
User Manual

ADDRESS: Ikitelli OSB Mah. Cevre 14. Blok Sok. Telas Blok Dis Kapi No: 1 Kat: 1-2 Basaksehir/Istanbul

Phone: +90 212 438 80 24
Fax: +90 212 438 80 25

info@gruparge.com

V.25.1

CONTENTS

PROPER USE AND SAFETY CONDITIONS 3
1. INTRODUCTION 4
1.1. General Features 4
1.2. Technical Features 4
1.3. Technical Drawing 4
1.3.1. 5 kVAr SVC Load Driver 4
1.3.2. 10 kVAr SVC Load Driver 5
1.3.3. 20 kVAr SVC Load Driver 5
1.3.4. 30 kVAr SVC Load Driver 5
1.3.5. 60 kVAr SVC Load Driver 6
1.4. Connection Diagram 6
1.4.1. SVC (5 - 10 kVAr) Load Driver 6
1.4.2. SVC (20 - 30 kVAr) Load Driver 7
1.4.3. SVC (60 kVAr) Load Driver 7

PROPER USE AND SAFETY REQUIREMENTS

Cut all the power when connecting and disconnecting the device to a panel.

Do not clean the device with a solvent or similar material. Only use a dry cloth.

Please do not intervene to the device when a technical problem is encountered and get in contact with a technical service within the shortest time.

If the warnings are not taken into account, our company or the authorized dealer shall not be held responsible for the negative consequences.

Do not dispose in the trash, the device must be delivered to the collection centers (electronic device recycling centers). It should be recycled or disposed of without harming human health and environment.

The installation, assembly, activation and operation of the device should be done and used by only expert professionals and in accordance with safety regulations and instructions.

1. INTRODUCTION

1.1. General Features

SVC drives are switching elements that enable sensitive compensation even at low powers by activating the single-phase shunt reactors connected to each phase as much as the system needs. In the SVC system, the power of the shunt reactors is controlled by triggering at certain angles through thyristors. These reactors can be precisely adjusted in 1000 steps each, for a total of 3000 steps. SVC Drives are designed to drive 3 single phase shunt reactors. In this way, the power of these reactors, each of which is connected to a separate phase, is controlled independently and to provide the desired power.

1.2. Technical Features

- **Nominal Voltage:** 400 V.
- **Nominal Frequency:** 50 Hz.
- **Trigger Voltage:** 12 V DC.
- **Maximum Operating Current of the Device (IRms):**
  For SVC5; 7.2 A,
  For SVC10; 14.4 A
  For SVC20; 28.8 A,
  For SVC30; 43.3 A
  For SVC60; 87 A.
- **Ambient Temperature:** -10 C° / +45 C°.
  Protection Class: IP00.
- **Response Time:** 20 ms.
- **Humidity:** %95.
- **Nominal Cable Cross Section:**
  For SVC5; 3(1x2.5) mm²,
  For SVC10; 3(1x4) mm²
  For SVC20; 3(1x10) mm²,
  For SVC30; 3(1x16) mm²
  For SVC60; 3(1x35) mm²

- For powers greater than 60 kVAr, solutions can be produced by connecting up to 3 drives in parallel.
- 20, 30 and 60 kVAr models have NC (Normally Closed) thermal control.
- Inductive Static Contactors should be used for fast switching on of Three-Phase Shunt Reactors.

1.3. Technical Drawing

1.3.1. 5 kVAr SVC Load Driver

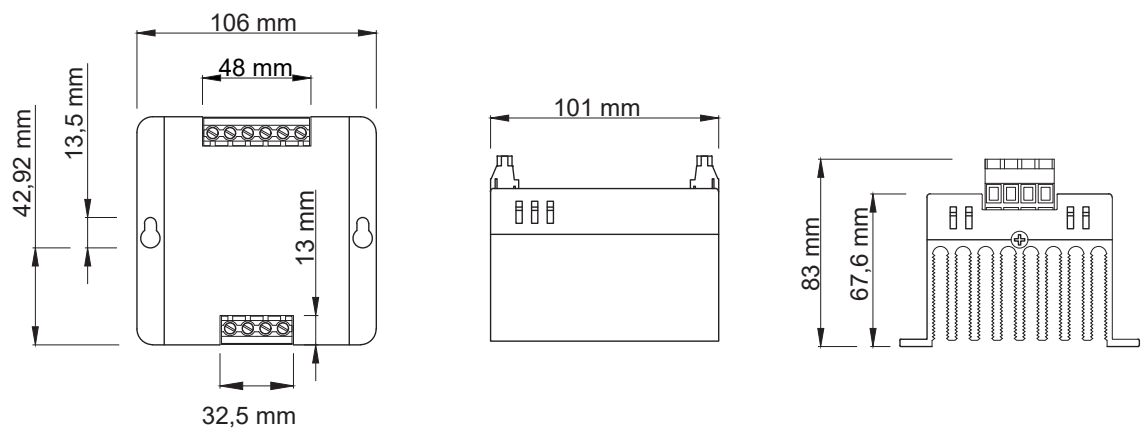

1.3.2. 10 kVAr SVC Load Driver

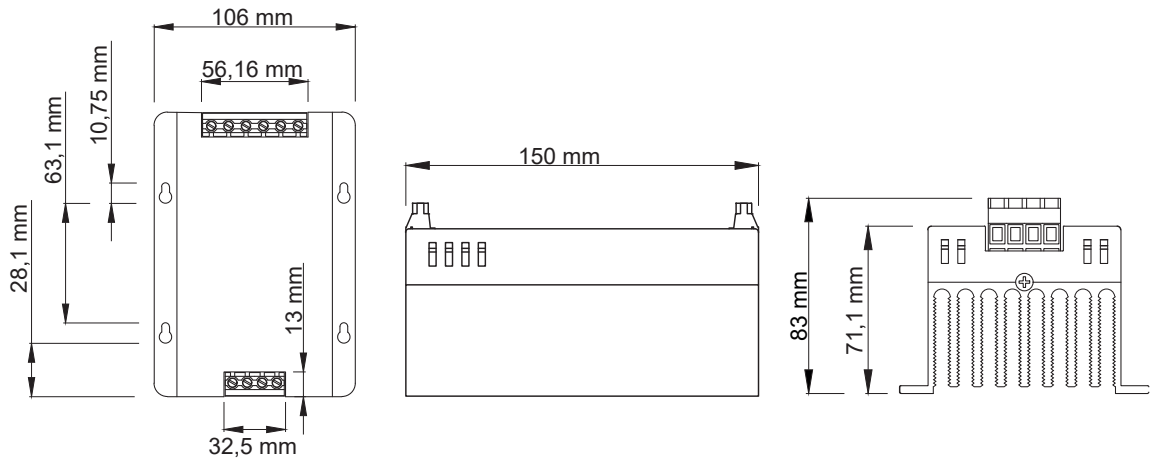

1.3.3. 20 kVAr SVC Load Driver

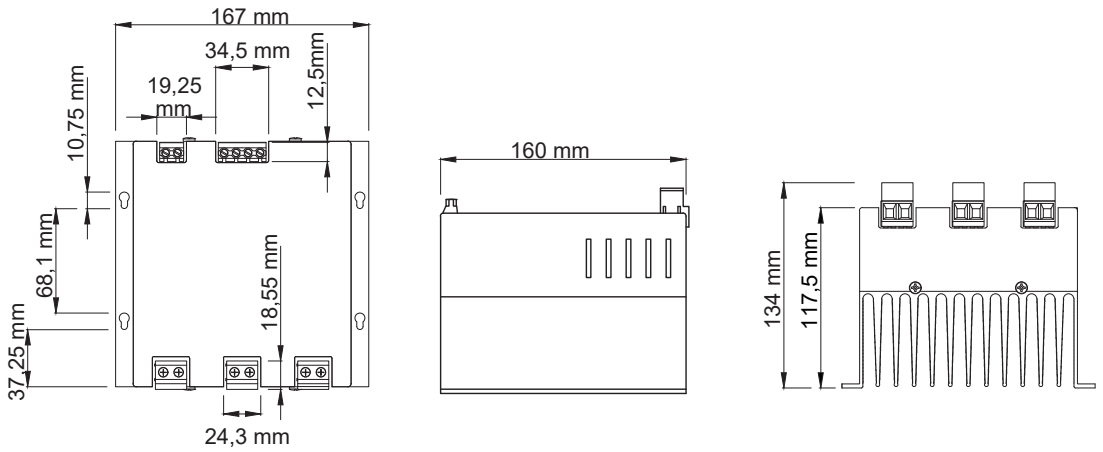

1.3.4. 30 kVAr SVC Load Driver

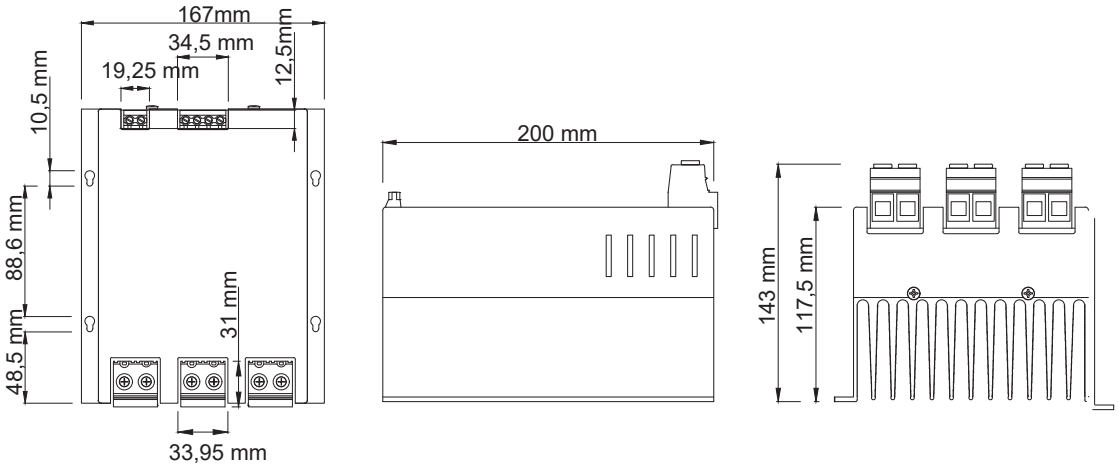

1.3.5. 60 kVAr SVC Load Driver

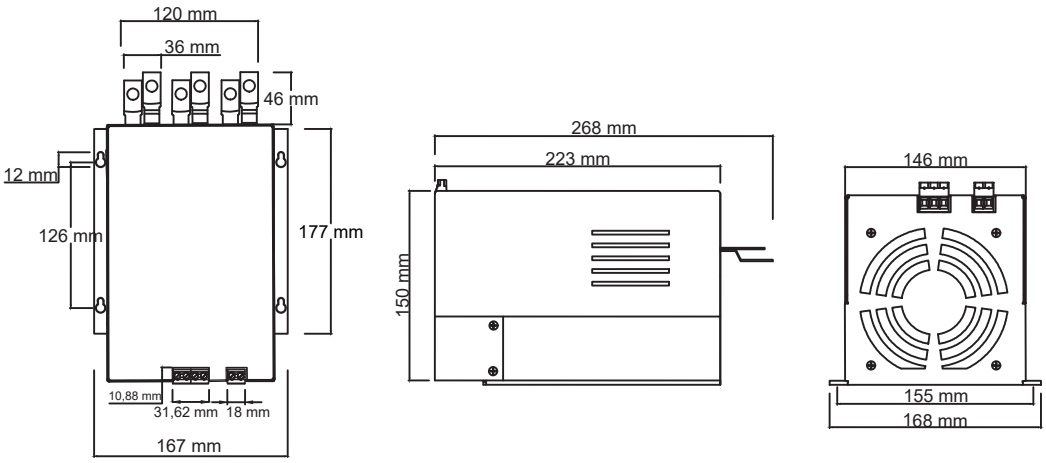

1.4. Connection Diagram

1.4.1. SVC (5 - 10 kVAr) Load Driver

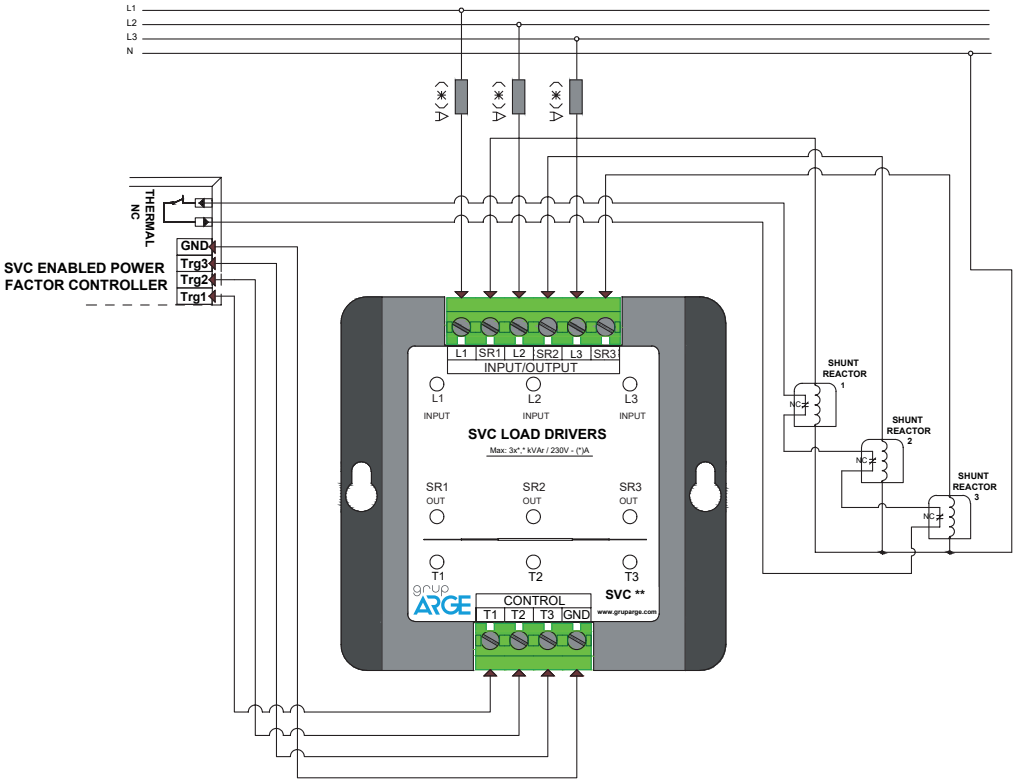

1.4.2. SVC (20 - 30 kVAr) Load Driver

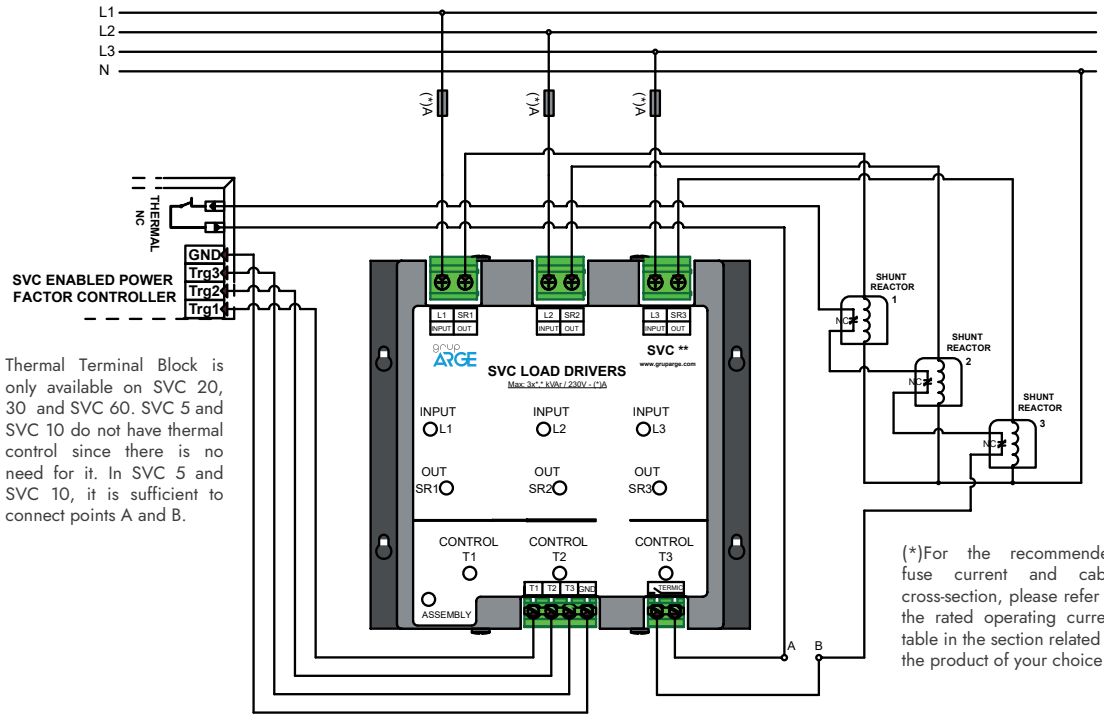

Thermal Terminal Block is only available on SVC 20, 30 and SVC 60. SVC 5 and SVC 10 do not have thermal control since there is no need for it. In SVC 5 and SVC 10, it is sufficient to connect points A and B.

(*)For the recommended fuse current and cable cross-section, please refer to the rated operating current table in the section related to the product of your choice.

1.4.3. SVC (60 kVAr) Load Driver

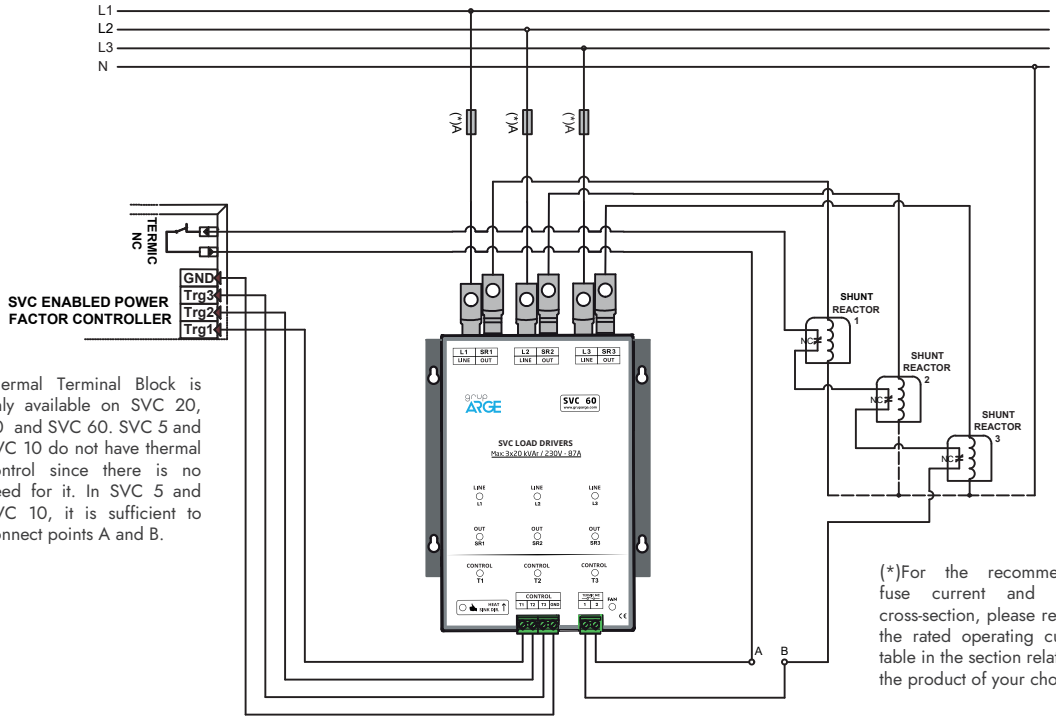

Thermal Terminal Block is only available on SVC 20, 30 and SVC 60. SVC 5 and SVC 10 do not have thermal control since there is no need for it. In SVC 5 and SVC 10, it is sufficient to connect points A and B.

(*)For the recommended fuse current and cable cross-section, please refer to the rated operating current table in the section related to the product of your choice.