Compensation Contactors
User Manual

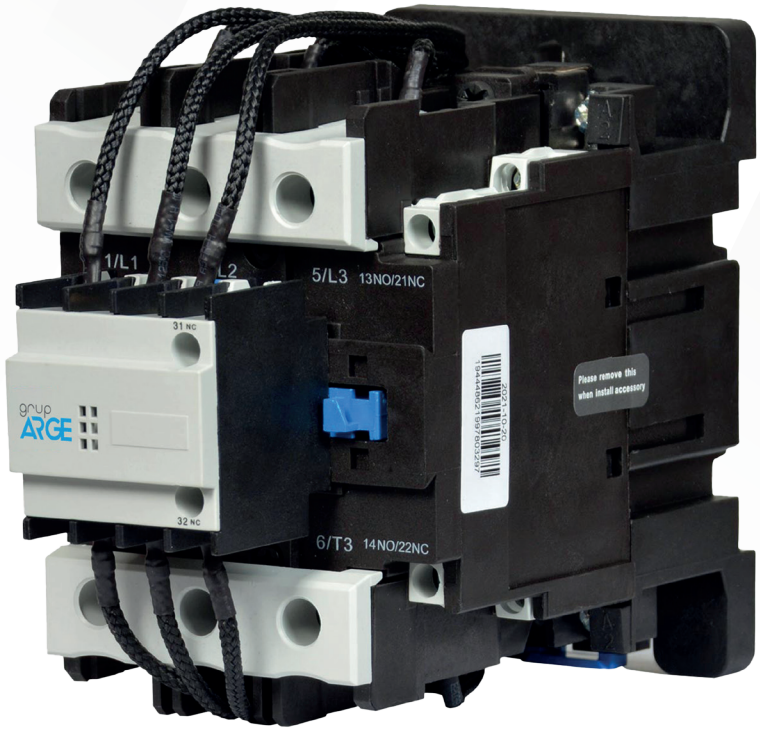

ADDRESS: Ikitelli OSB Mah. Cevre 14. Blok Sok. Telas Blok Dis Kapi No: 1 Kat: 1-2 Basaksehir/Istanbul

Phone: +90 212 438 80 24
Fax: +90 212 438 80 25

info@gruparge.com

V.25.1

CONTENTS

PROPER USE AND SAFETY CONDITIONS 3
1. INTRODUCTION 4
1.1. General Features 4
1.2. Technical Features 5
1.3. Technical Data 5
1.4. Technical Drawing 6
1.5. Connection Diagram 7

PROPER USE AND SAFETY REQUIREMENTS



Cut all the power when connecting and disconnecting the device to a panel.



Do not clean the device with a solvent or similar material. Only use a dry cloth.



Please do not intervene to the device when a technical problem is encountered and get in contact with a technical service within the shortest time.



If the warnings are not taken into account, our company or the authorized dealer shall not be held responsible for the negative consequences.



Do not dispose in the trash, the device must be delivered to the collection centers (electronic device recycling centers). It should be recycled or disposed of without harming human health and environment.



The installation, assembly, activation and operation of the device should be done and used by only expert professionals and in accordance with safety regulations and instructions.

1. INTRODUCTION

1.1. General Features

Compensation contactors are electromagnetic switching devices that enable the safe and controlled connection or disconnection of capacitor banks in compensation systems. As is well known, capacitors cause very short-term high currents of up to 200 times the rated current between 1 and 15 kHz when first connected to the circuit. Contactors limit these short-term peak currents by up to 70 times, thereby extending the lifespan of both the capacitors and other electrical components in the system, ensuring long-term system safety and energy efficiency.

Operating Principle

When the contactor is first energized, the auxiliary contacts are activated first and remain in the circuit for approximately 2–3 milliseconds. During this brief pre-switching period, the high peak currents generated when the capacitors are energized are damped by passing through current-limiting resistors within the contactor. These resistors slow down the sudden peak current of the capacitors, reducing voltage fluctuations in the system and the risk of arcing on the contact surfaces.

The auxiliary contacts are disconnected after limiting the peak current, and the main contacts are connected, synchronizing the capacitor bank directly with the system. Thanks to this two-stage switching process, the main contacts are not exposed to high surge currents. This protects both their electrical and mechanical life and prevents faults such as welding, contact melting, or surface deformation.

Warning

Dangerous voltage values can cause shock and burns. In such cases, be sure to disconnect the power before touching the product. Function testing cannot be performed without discharging the capacitor. Do not test by removing the resistor block. The coils operate within a range of +10% and -15% of the current operating voltage.

Maintenance Instructions

Clean dust with compressed air. If not cleaned carefully, foreign matter in the magnetic poles may cause noise. Do not use chemicals or sharp objects for cleaning. If noise persists despite careful cleaning, replace the contactor.

1.2. Technical Features

Standards	:	IEC / EN 60947 - 4 - 1
Maximum Operating Voltage (Um)	:	690 V
Rated Operational Voltage (Ue)	:	220/230V, 380/400V, 660/690V
Rated Frequency	:	50 - 60 Hz
Restrained Surge Capacity	:	20 x In
Protection Class	:	IP20
Ambient Temperature	:	-5 / +40 °C
Altitude	:	≤ 2000m
Pollution Degree	:	3
Installation Category	:	III
Relative Humidity	:	Max. %50 at +40 °C Max. %90 at +20 °C
Auxiliary Contact	:	AC-15: Ie: 0.95A Ue: 380/400V DC-13: Ie: 0.15A Ue: 220/250V Thermal Current Ith: 10A
Operating Frequency Cycles/h	:	120
Electrical Durability	:	KNT K2.5 - KNT K50.0 (100.000) KNT K60.0 - KNT K75.0 (20.000)
Mechanical Durability	:	KNT K2.5 - KNT K50.0 (1.000.000) KNT K60.0 - KNT K75.0 (3.000.000)

1.3. Technical Data

Product Name	Power (kVAr)			Ith (A)	Auxiliary Contact		Operating Current (Ac-6b) (for 400 V)	Tightening Torque (N.m)		Nominal Cable Cross Section (mm²)	Mounting
	230 V	400 V	690 V		NO	NC		Main Contact	A1-A2		
KNT K2.5	0,8	2,5	4	25	1	1	3,60	0,8	0,8	3(1x4)	DIN Rail (35 mm) or M4 Screw
KNT K5.0	1,7	5	7	25	1	1	7,20	0,8	0,8	3(1x4)	
KNT K7.5	2,5	7,5	11	25	1	1	11,00	0,8	0,8	3(1x4)	
KNT K10.0	3,3	10	15	25	1	1	14,00	0,8	0,8	3(1x4)	
KNT K12.5	4,2	12,5	18	32	1	1	18,00	0,8	0,8	3(1x4)	
KNT K15.0	5,0	15	22	32	1	1	22,00	1,2	0,8	3(1x6)	
KNT K20.0	6,7	20	26	43	1	1	29,00	1,2	0,8	3(1x10)	
KNT K25.0	8,3	25	36	63	1	2	36,00	1,2	0,8	3(1x10)	DIN Rail (35/75 mm) or M4 Screw
KNT K30.0	10,0	30	44	63	1	2	44,00	1,2	0,8	3(1x16)	
KNT K40.0	13,3	40	58	95	1	2	58,00	1,2	0,8	3(1x25)	
KNT K50.0	16,7	50	92	95	1	2	72,00	6	0,8	3(1x35)	
KNT K60.0	20,0	60	100	200	1	0	87,00	10	0,8	3(1x35)	DIN Rail (35 mm) or M5 Screw
KNT K70.0	23,3	70	105	275	1	0	101,00	10	0,8	3(1x50)	
KNT K75.0	25,0	75	110	275	1	0	108,00	10	0,8	3(1x70)	

**The 230V power in the table indicates the maximum single-phase load at phase to-netural voltage; the 400V power indicates the maximum three-phase load at phase-to-phase voltage.*

1.4. Technical Drawing

KNT K2.5, KNT K5.0, KNT K7.5, KNT K10.0, KNT K12.5, KNT K15.0, KNT K20.0

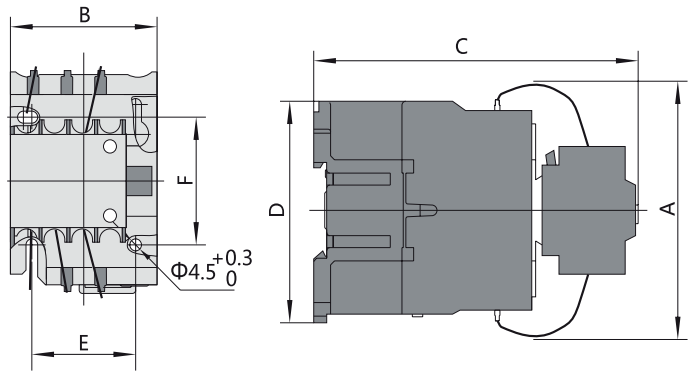

Contactor Type	Amax	Bmax	Cmax	Dmax	Emax	Fmax
KNT K2.5, KNT K5.0, KNT K7.5, KNT K10.0	80	47	124	76	34/35	50/60
KNT K12.5, KNT K15.0	90	58	132	86	40	48
KNT K20.0	90	58	136	86	40	48

KNT K25.0, KNT K30.0, KNT K40.0, KNT K50.0

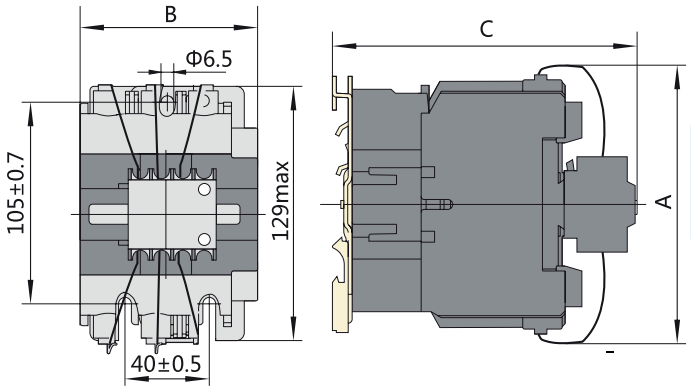

Contactor Type	Amax	Bmax	Cmax	Dmax	Emax	Fmax
KNT K25.0, KNT K30.0	132	79	150	-	-	-
KNT K40.0, KNT K50.0	135	87	158	-	-	-

KNT K60.0, KNT K70.0, KNT K75.0

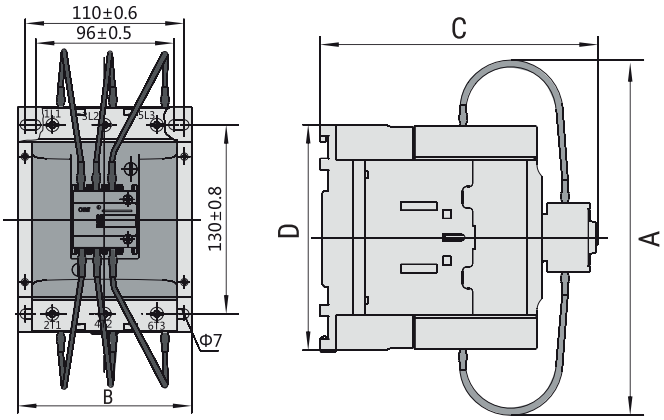

Contactor Type	Amax	Bmax	Cmax	Dmax	Emax	Fmax
KNT K60.0, KNT K70.0, KNT K75.0	200	120	192	155	-	-

1.5. Connection Diagram

Compensation Contactor

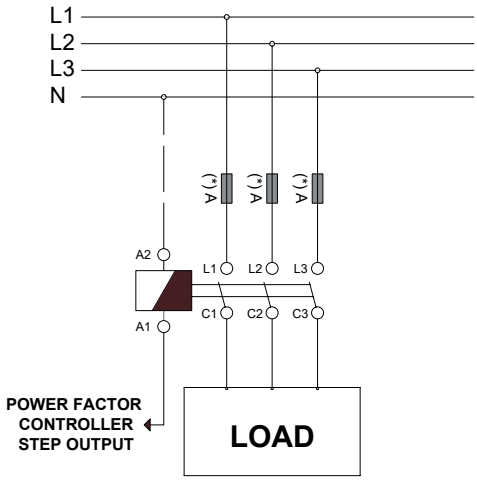

(*)For the recommended fuse current and cable cross-section, please refer to the rated operating current table in the section related to the product of your choice.