Analog Input Module
User Manual

ADDRESS: Ikitelli OSB Mah. Cevre 14. Blok Sok. Telas Blok Dis Kapi No: 1 Kat: 1-2 Basaksehir/Istanbul

Phone: +90 212 438 80 24
Fax: +90 212 438 80 25

info@gruparge.com

V.25.1

CONTENTS

PROPER USE AND SAFETY REQUIREMENTS 3
1. INTRODUCTION 4
1.1. General Features 4
1.2. Technical Features 4
1.3. Technical Drawing 4
1.4. Connection Diagrams 5
2. MODBUS MAP 6
2.1. Modbus Map 6
2.2. Communication Parameters 7
2.3. Modbus Speed 7

PROPER USE AND SAFETY REQUIREMENTS

Cut all the power when connecting and disconnecting the device to a panel.

Do not clean the device with a solvent or similar material. Only use a dry cloth.

Please do not intervene to the device when a technical problem is encountered and get in contact with a technical service within the shortest time.

If the warnings are not taken into account, our company or the authorized dealer shall not be held responsible for the negative consequences.

Do not dispose in the trash, the device must be delivered to the collection centers (electronic device recycling centers). It should be recycled or disposed of without harming human health and environment.

The installation, assembly, activation and operation of the device should be done and used by only expert professionals and in accordance with safety regulations and instructions.

1. INTRODUCTION

1.1. General Features

Analog sensor data providing 0-10 V DC and 4-20 mA DC output with the Analog Input Module can be read via the RS-485 line using the Standard Modbus RTU protocol. The device can be mounted on a panel rail.

1.2. Technical Features

- Microprocessor based.
- **Supply Voltage:** 9-30 V DC.
- **Communication Protocol:** RS-485 / Modbus RTU.
- There are 3 x 0-10 V DC analog sensor input.
- There are 3 x 4-20 mA DC analog sensor inputs.
- **LED Status:** It has POWER, ERROR and RS-485 LED
- **Ambient Temperature:** -10 °C /+55 °C.
- **Supply Consumption Power:** < 1 VA.
- **Protection Class:** IP40.

1.3. Technical Drawing

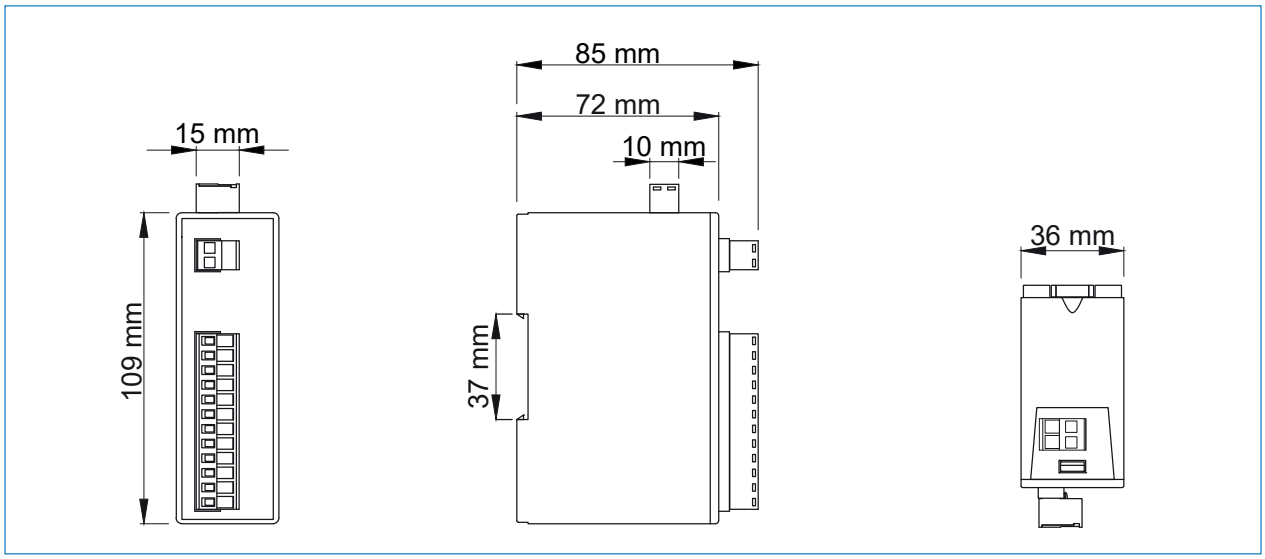

1.4. Connection Diagram

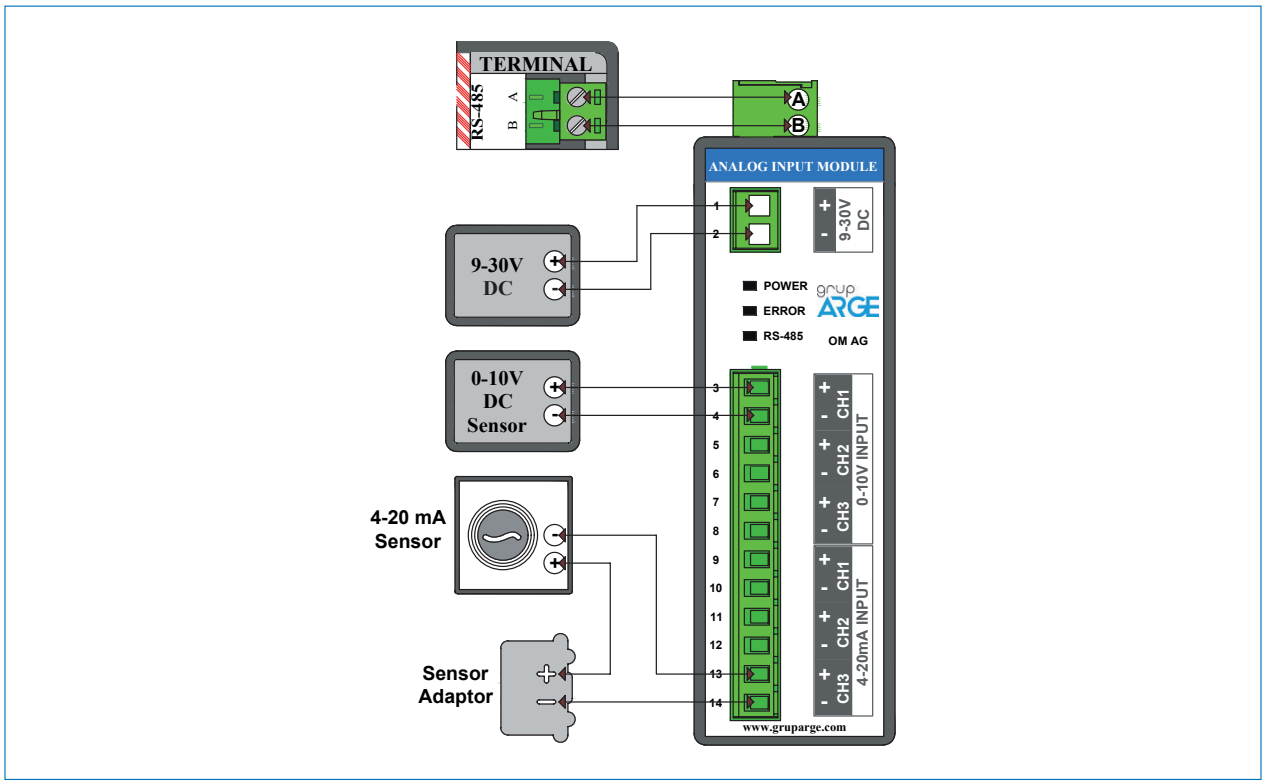

It is recommended to select the cable for RS-485 communications according to the table below.

Cable Distance	Recommended Cable	Alternative Recommendation
Up to 30 m	3*0,22 Shielded and Twisted Signal Cable	CAT-5 Ethernet Cable
Over 30 m	3*0,50 Shielded and Twisted Signal Cable	CAT-6 Ethernet Cable

2. MODBUS MAP

2.1. Modbus Map

- The parameters that the user can read, write and clear are shown in the table below. In the R/W/C column in the table;
- R→ The parameter can be read,
- W→ The parameter can be wrote,
- C → Indicates that the parameter can be cleared.

NOTE: A parameter can have more than one property at the same time.
E.g; R/W in column If written, it indicates that the parameter can be both read and written.

MODBUS MAP					
Analog Input Module					
INPUT REGISTER					
PARAMETRE NAME	ADDRESS (dec)	UNIT	MULTIPLIER	DATA TYPE	R/W/C
Serial Number	998	-	-	32 Bit Long	R
1. Channel – Analog Input Value	1000	-	0,01	16 Bit Int	R
2. Channel – Analog Input Value	1001	-	0,01	16 Bit Int	R
3. Channel – Analog Input Value	1002	-	0,01	16 Bit Int	R
4. Channel – Analog Input Value	1003	-	0,01	16 Bit Int	R
5. Channel – Analog Input Value	1004	-	0,01	16 Bit Int	R
6. Channel – Analog Input Value	1005	-	0,01	16 Bit Int	R
HOLDING REGISTER					
PARAMETER NAME	ADDREES (dec)	UNIT	MULTIPLIER	DATA TYPE	R/W/C
Serial Number	100	-	-	32 Bit Long	R
Product (Type, Sub-Type)	102	-	-	16 Bit Int	R
Application Version (Main,Sub)	103	-	-	16 Bit Int	R
Hardware (0, Type)	104	-	-	16 Bit Int	R
Hardware Version (Main, Sub)	105	-	-	16 Bit Int	R
Parameter Version	106	-	-	16 Bit Int	R
System Version (Main,Sub)	107	-	-	16 Bit Int	R
Modbus Address [1:254]	206	-	-	16 Bit Int	R/W
Bus Speed [0:1200, 1:2400, 2:4800, 3:9600, 4:19200]	207	Bps	-	16 Bit Int	R

2.2. Communication Parameters

Baudrate	9600 bps
Data Bits	8
Parity	None
Stop Bits	1

NOTE: The default Modbus address is the number obtained by adding 100 to the last two digits of the serial number of the device. For example, suppose the serial number is 185247. Since it ends with 47, Modbus address becomes 147.

2.3. Modbus Speed

Modbus speed is determined by indexes between 0-4.The table below contains Modbus speeds according to the indexes. By adjusting the Bus Speed part of the Modbus map, the desired speed can be obtained from the table below.

Index	0	1	2	3	4
Modbus Speed (Bps)	1200	2400	4800	9600	19200