Time Relays (ZMN21) User Manual

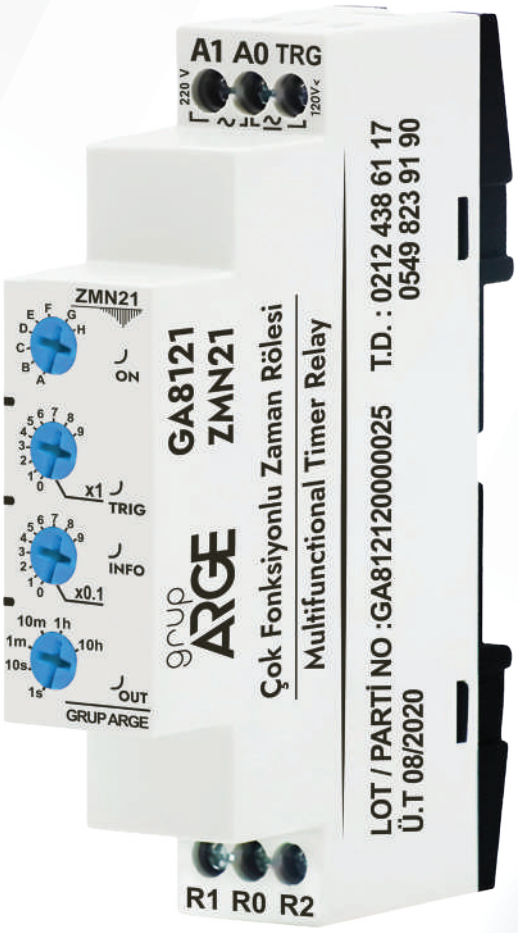

ADDRESS: Ikitelli OSB Mah. Cevre 14. Blok Sok. Telas Blok Dis Kapi No: 1 Kat: 1-2 Basaksehir/Istanbul

Phone: +90 212 438 80 24
Fax: +90 212 438 80 25

info@gruparge.com

V.25.1

CONTENTS

PROPER USE AND SAFETY REQUIREMENTS 3
1. INTRODUCTION 4
1.1. General Features 4
1.2. Technical Features 4
1.3. LED Descriptions 5
1.4. LED Warnings 5
1.5. Function Table 6
1.6. Use of the Device 6
1.7. Time Setting 7
1.8. Function Diagram 7
1.9. Technical Drawing 10
1.10. Product Assembly and Disassembly 10
1.11. Connection Diagram 11

PROPER USE AND SAFETY REQUIREMENTS



Cut all the power when connecting and disconnecting the device to a panel.



Do not clean the device with a solvent or similar material. Only use a dry cloth.



Please do not intervene to the device when a technical problem is encountered and get in contact with a technical service within the shortest time.



If the warnings are not taken into account, our company or the authorized dealer shall not be held responsible for the negative consequences.



Do not dispose in the trash, the device must be delivered to the collection centers (electronic device recycling centers). It should be recycled or disposed of without harming human health and environment.



The installation, assembly, activation and operation of the device should be done and used by only expert professionals and in accordance with safety regulations and instructions.

1. INTRODUCTION

1.1. General Features

Electronic time relays are microprocessor-based control devices used in time-critical processes. These devices are specially designed to activate or deactivate a circuit or a system within the set time and function. This relay group, which is generally used in the control panels of power circuits, can basically control the system by changing the relay positions with or without delay. In terms of operating function, there are basically two types of time relays: pull delayed and release delayed. Relays with a delay in pulling are known as straight time relays, while relays with a delay in releasing are known as reverse time relays.

This relay group, which has many different models, has varieties such as flasher model that can operate on and off, right-left relay known as inversion relay in the industry, which is used as an automatic position (direction) changer in automatic systems and repeats this process at intervals determined by the time setting on it, trigged time relay that can operate with trigger detection, star-delta time relay that controls the star-delta connection on a time basis.

1.2. Technical Features

Operating Voltage:	180 - 280 V AC
Operating Frequency:	50 / 60 Hz
Time Interval:	0.1 sec-99 h.
Relay Output:	1 x C/O, 5 A @ 250 VAC
Adjustment:	Potentiometer
Indicator:	4 LEDs
Ambient Temperature:	-5°C to +50°C
Protection Class:	IP20
Mounting:	DIN Rail

1.3. LED Descriptions

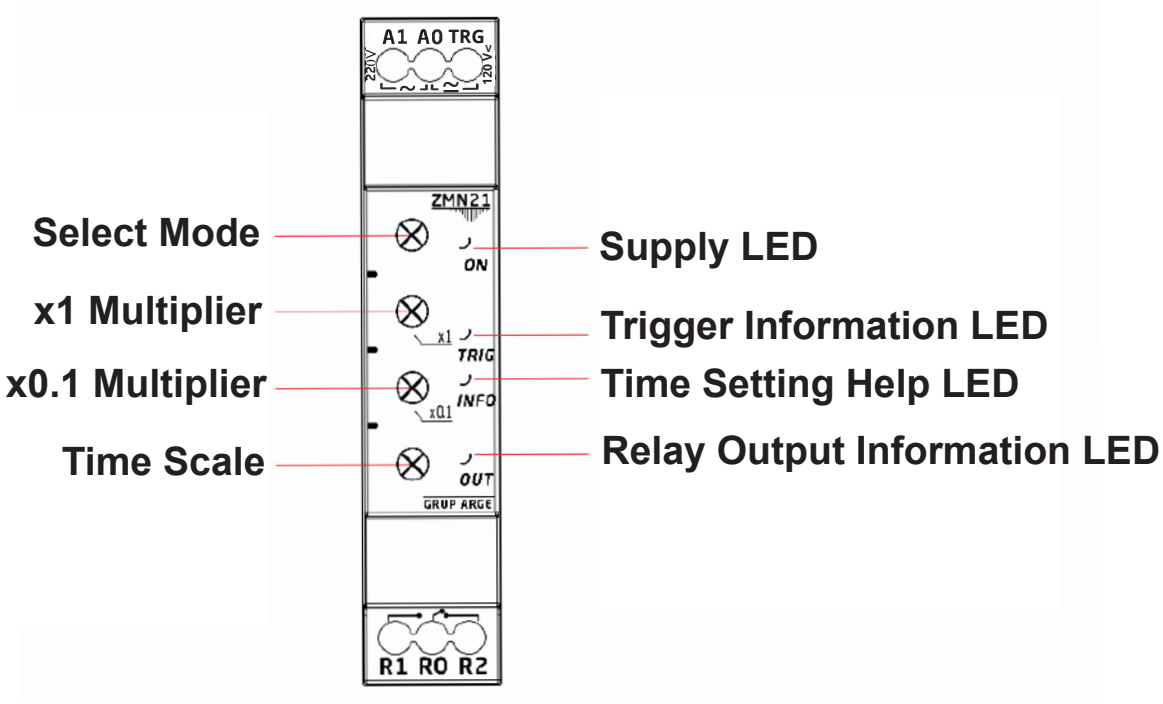

1.4. LED Warnings

●	**ON**	It shows that energy exists. It also flashes when the potentiometer changes.
◐	**TRIG**	Lights if the selected mode is a Trig mode and trig is detected. Off if trig is not detected.
●	**INFO**	When adjusting the potentiometer, it lights up if the time value is set correctly, it turns off if it remains in the unstable zone.
●	**OUT**	On when the relay is pulled, off when it is not pulled.

Table:1

* ◐ Flasher

* ● Flashing

1.5. Function Table

A Mode - Delayed Release
B Mode - Delayed Pull
C Mode - Symmetric Flasher
D Mode - Delayed Pullout with Control Input
E Mode - Delayed Release with Control Input
F Mode - Delayed Pulling on Rising Edge, Delayed Release on Falling Edge
G Mode - On the Rising and Falling Edge, Delayed Release
H Mode - One-Second Pulse on Delayed Triggered Pull

1.6. Use of the Device

ZMN21 Time Relays;

ZMN21 model is a multi-mode time relay model. Mode selection can be made with the first potentiometer on it. Time setting and mode selection are read only when the device is first turned on. In other words, if the time or mode is changed while the device is operating in any mode, there is no change in the operation of the device. In order to set the new mode and time, the supply voltage must be interrupted and restarted. ZMN21 model also has INFO LED feature. Thanks to this feature, while the user is setting the time or mode with the potentiometers, the change is locked to the detected potentiometer and informs that the setting is correct. In other words, if it is in the intermediate (critical) zones, the INFO LED turns off, if it is in the safe zones, the INFO LED turns on. At the same time, when the device is first energized, if any of the potentiometers is in a critical zone, the INFO LED works as a flasher.

A Mode: It is a delayed release mode. When the supply voltage is applied, the relay immediately pulls in regardless of the trigger input and the green relay LED lights up. At the end of the set Ton time, the relay releases and remains in the off position until de-energized.

B Mode: It is a delayed pull-up mode. When the supply voltage is supplied, it starts counting the Toff time independent of the trigger input. At the end of the set Toff time, the relay pulls, the relay LED lights up and remains in the pulled position until the supply voltage is removed.

C Mode: Symmetrical Flasher mode. Flasher behavior, which starts as Toff start when energy is received, pulls the relay at the end of the set Toff time, releases the relay at the end of the Ton time and continues this process periodically. The set time is the same for Toff and Ton.

D Mode: When a signal is applied to the control input, the set Toff time starts counting. At the end of the Toff time, the relay pulls. The relay maintains its position until the supply voltage of the device is cut off or the trigger signal is cut off. If the trigger signal is interrupted before the Toff time, the counted Toff time is deleted.

E Mode: When a signal is applied to the control input, the relay pulls immediately and the relay LED lights up. If the trigger signal is interrupted, the time starts counting. The relay releases at the end of the time. If the trigger input is interrupted again before the end of the Toff time, the time is deleted.

F Mode: With the application of supply voltage and trigger signal, the set Toff time starts counting and the relay pulls out at the end of the time. With the interruption of the trigger signal, the Ton time starts counting and the relay changes its position at the end of the time.

G Mode: With the application of supply voltage and trigger signal, the relay remains in the pulled position for the set Ton time. When the trigger signal is interrupted, the Ton time starts counting again and the relay is pulled again for this time. If the signal is applied or interrupted, the relay output is pulled for the set time. When the trigger signal is interrupted and applied again, the time starts counting again.

H Mode: With the application of the supply voltage and trigger signal, the Tone time starts counting and at the end of the time, the relay output is pulled for 1 second. When the trigger signal is applied again before the end of the Toff time, the time is reset and the Toff time starts over.

1.7. Time Setting

x1	x0.1	Mode	Set Time
3	9	1s	3.9 Sec.
3	9	10s	39 Sec.
3	9	1m	3.9 Min.
3	9	10m	39 Min.

Table:2

1.8. Function Diagram

R / 	Relay
U	Source Voltage
T	Trigger Signal

Table:3

A Mode:

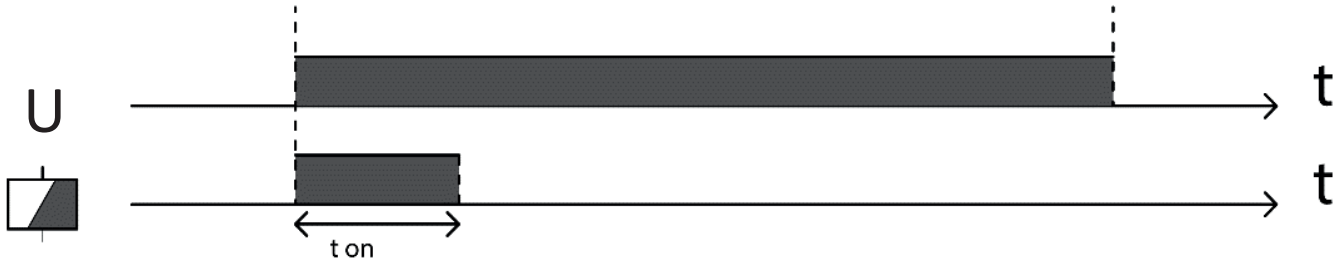

B Mode:

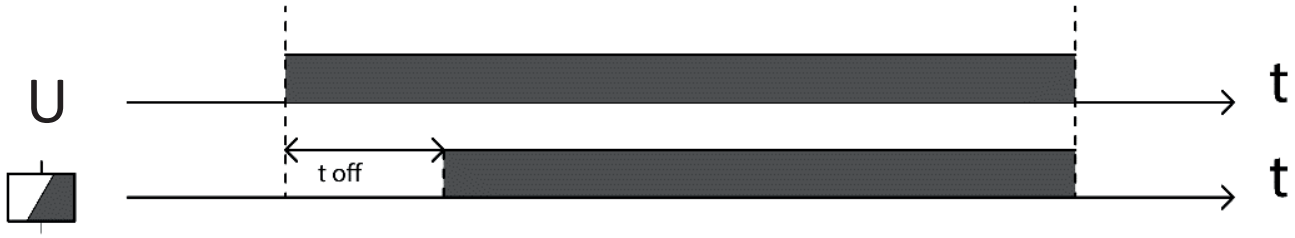

C Mode:

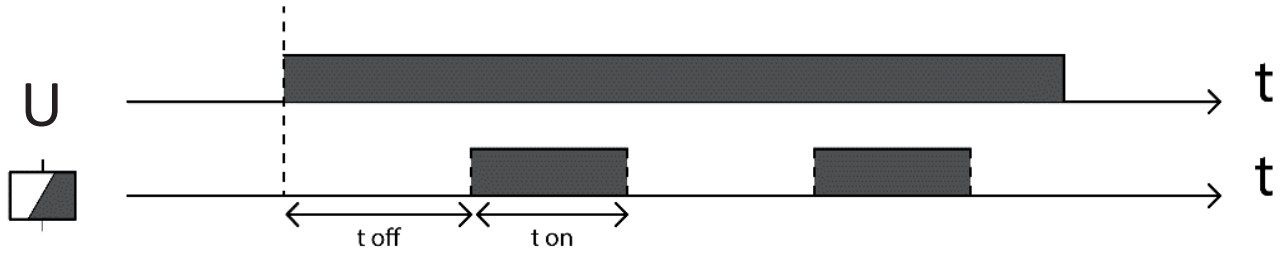

D Mode:

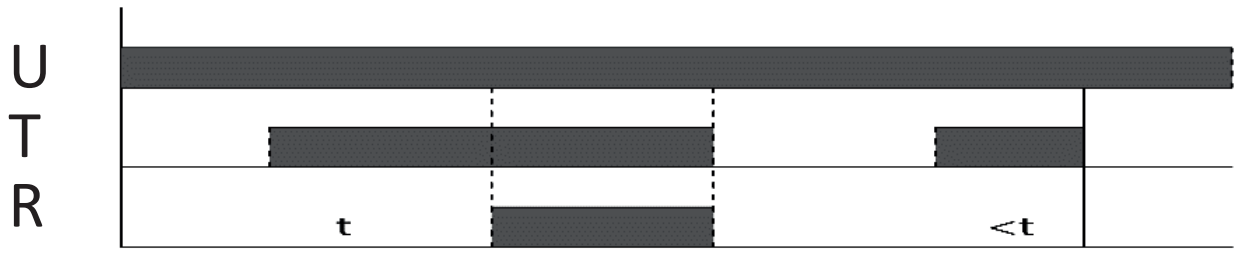

E Mode:

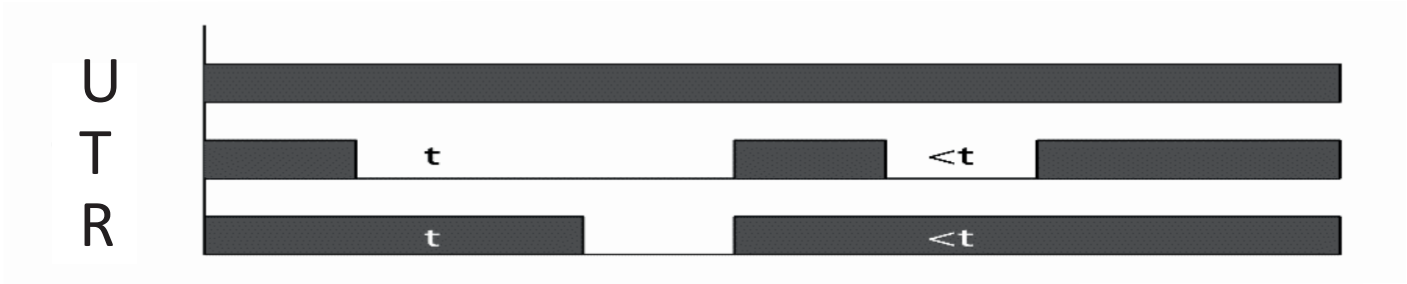

F Mode:

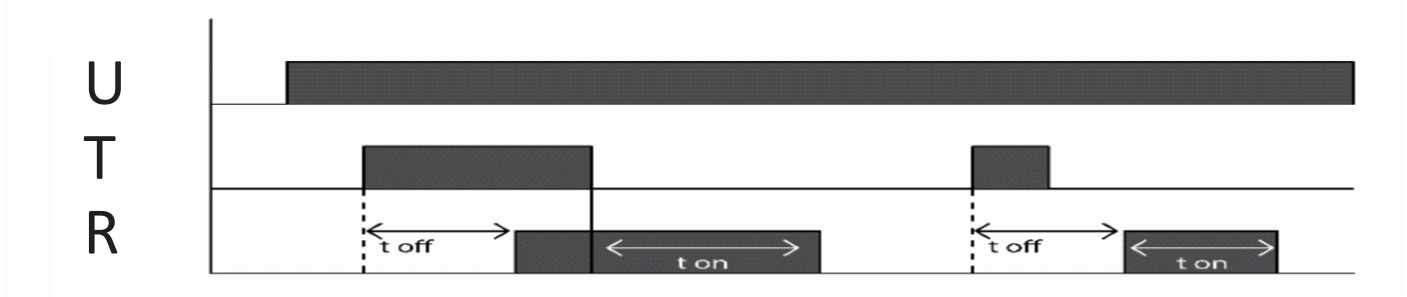

G Mode:

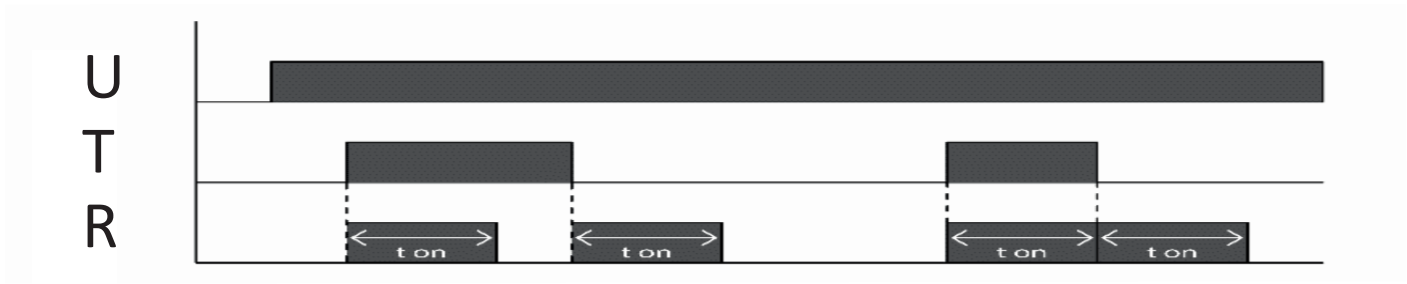

H Mode:

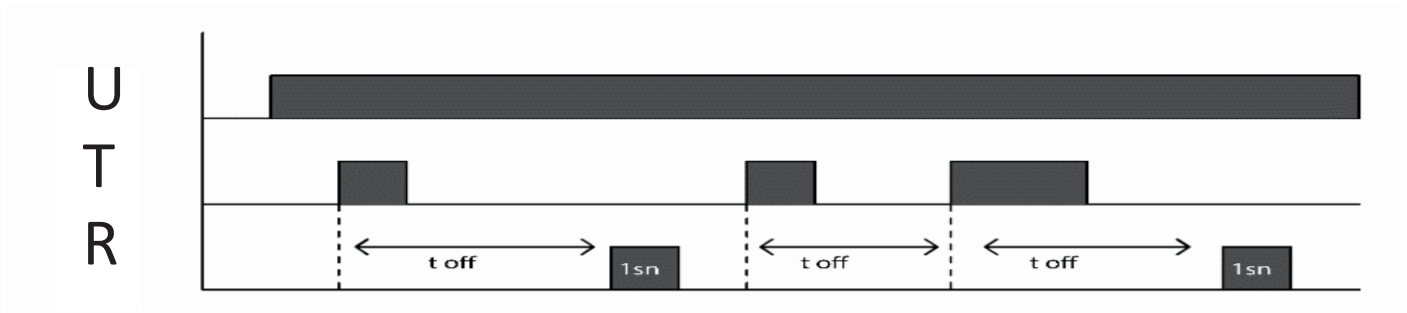

1.9. Technical Drawing

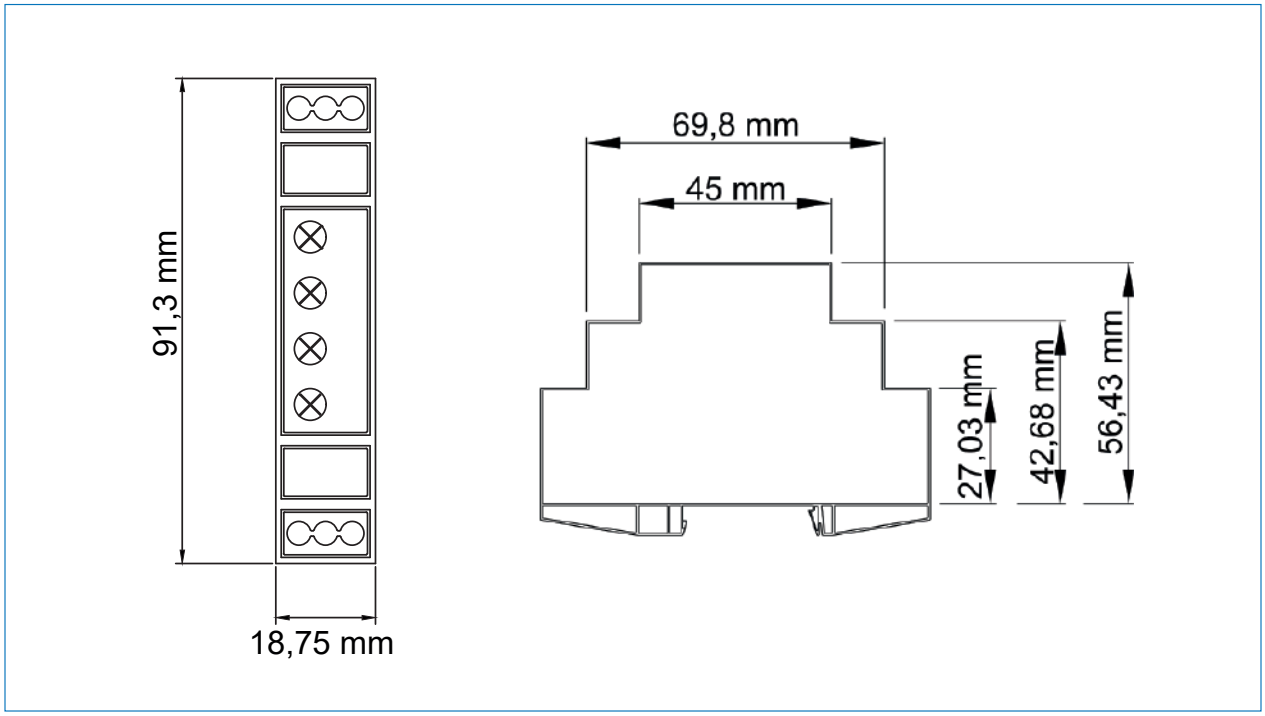

1.10. Product Assembly and Disassembly

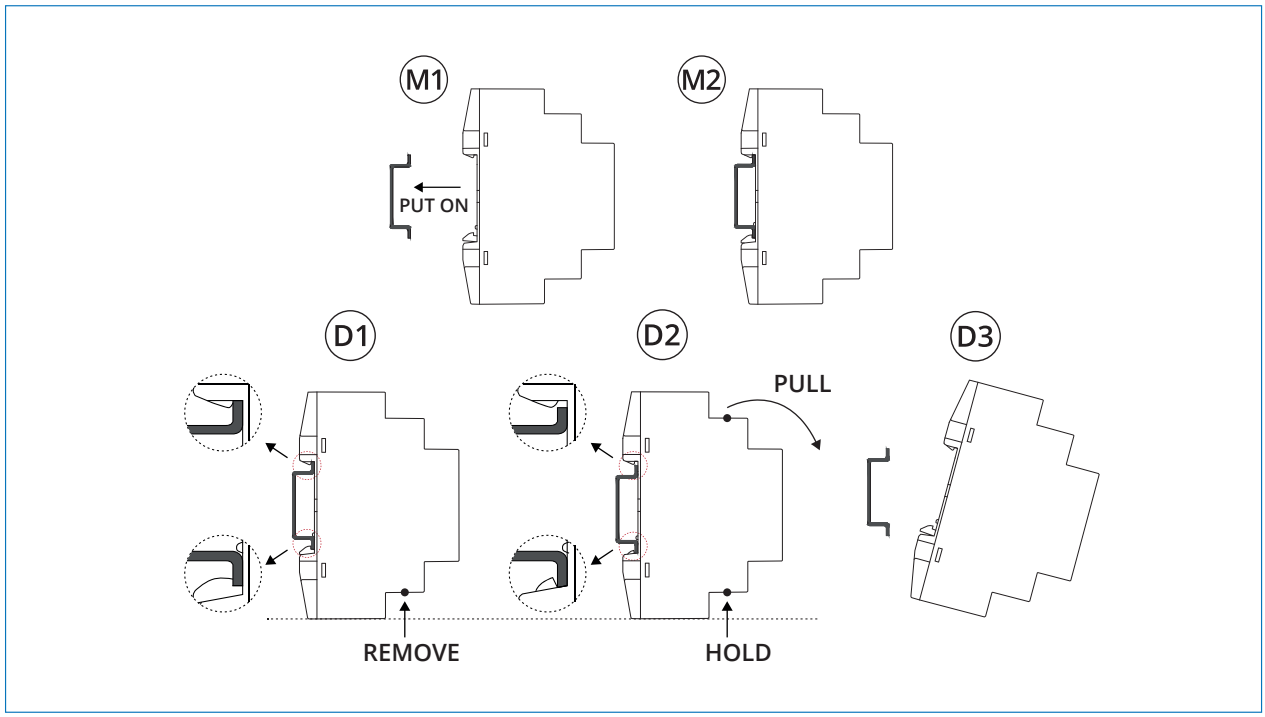

1.11. Connection Diagram

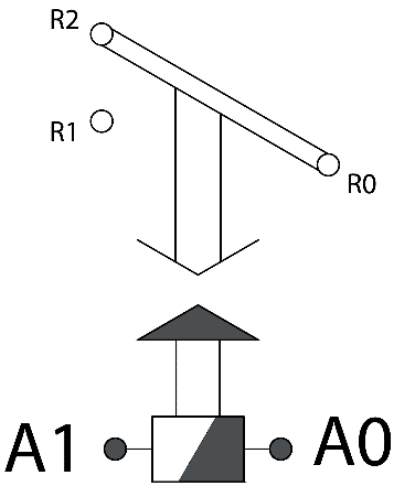

(180-280 V AC)