Time Relays (ZMN03 & ZMN04) User Manual





ADDRESS: Ikitelli OSB Mah. Cevre 14. Blok Sok. Telas Blok Dis Kapi No: 1 Kat: 1-2 Basaksehir/Istanbul

Phone: +90 212 438 80 24
Fax: +90 212 438 80 25

info@gruparge.com

V.25.1

CONTENTS

PROPER USE AND SAFETY REQUIREMENTS 3
1. INTRODUCTION 4
1.1. General Features 4
1.2. Technical Features 4
1.3. LED Descriptions 5
1.4. LED Warnings 5
1.5. Use of the Device 6
1.6. Selection Table 6
1.7. Time Setting 7
1.8. Function Diagram 8
1.9. Technical Drawing 8
1.10. Product Assembly and Disassembly 9
1.11. Connection Diagram 9

PROPER USE AND SAFETY REQUIREMENTS



Cut all the power when connecting and disconnecting the device to a panel.



Do not clean the device with a solvent or similar material. Only use a dry cloth.



Please do not intervene to the device when a technical problem is encountered and get in contact with a technical service within the shortest time.



If the warnings are not taken into account, our company or the authorized dealer shall not be held responsible for the negative consequences.



Do not dispose in the trash, the device must be delivered to the collection centers (electronic device recycling centers). It should be recycled or disposed of without harming human health and environment.



The installation, assembly, activation and operation of the device should be done and used by only expert professionals and in accordance with safety regulations and instructions.

1. INTRODUCTION

1.1. General Features

Electronic time relays are microprocessor-based control devices used in time-critical processes. These devices are specially designed to activate or deactivate a circuit or a system within the set time and function. This relay group, which is generally used in the control panels of power circuits, can basically control the system by changing the relay positions with or without delay. In terms of operating function, there are basically two types of time relays: pull delayed and release delayed. Relays with a delay in pulling are known as straight time relays, while relays with a delay in releasing are known as reverse time relays.

This relay group, which has many different models, has varieties such as flasher model that can operate on and off, right-left relay known as inversion relay in the industry, which is used as an automatic position (direction) changer in automatic systems and repeats this process at intervals determined by the time setting on it, trigged time relay that can operate with trigger detection, star-delta time relay that controls the star-delta connection on a time basis.

1.2. Technical Features

Operating Voltage:	18-28 V AC/DC 180 - 280 V AC
Operating Frequency:	50 / 60 Hz
Time Interval:	0.1 sec-100 h. (ZMN03) 0.1 sec-999 min. (ZMN04)
Relay Output:	1 x C/O, 5 A @ 250 VAC
Adjustment:	Potentiometer
Indicator:	3 LEDs
Ambient Temperature:	-5°C to +50°C
Protection Class:	IP20
Mounting:	DIN Rail

1.3. LED Descriptions

ZMN03 :

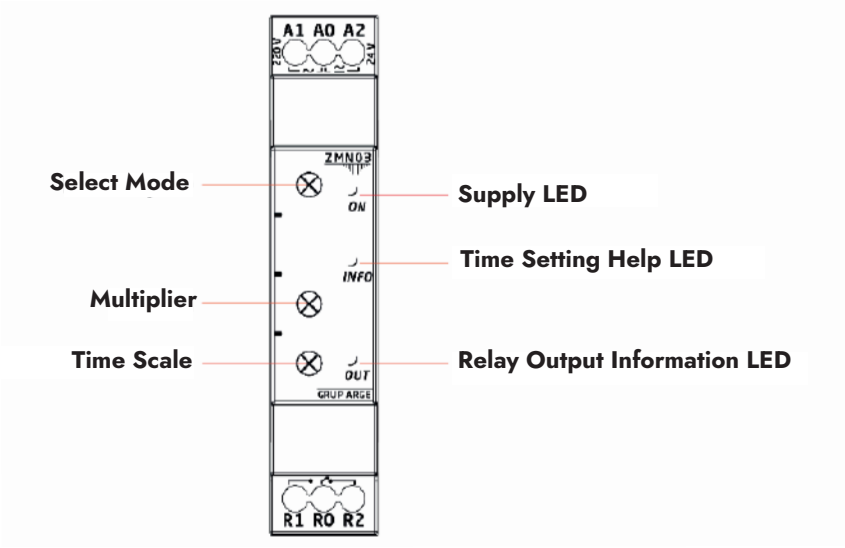

ZMN04 :

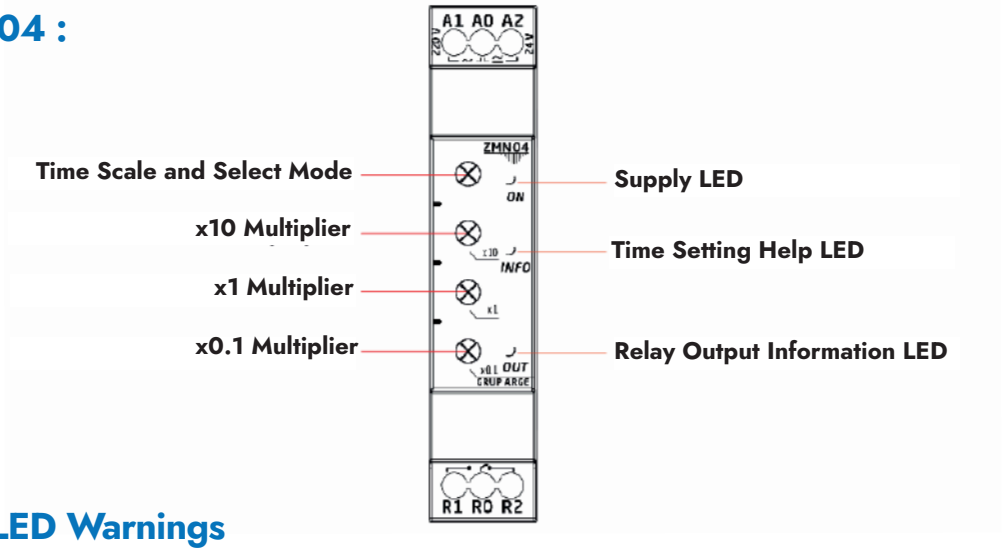

1.4. LED Warnings

●	ON	It shows that energy exists. It also flashes when the potentiometer changes.
◑	INFO	When adjusting the potentiometer, it lights up if the time value is set correctly, it turns off if it remains in the unstable zone.
●	OUT	On when the relay is pulled, off when it is not pulled.

Table:1

* ◑ Flasher

* ● Flashing

1.5. Use of the Device

ZMN03 and ZMN04 Time Relays;

If the set mode is pull-up delayed, the 'Toff' time starts counting when 'U' voltage is applied to the supply input. After the end of the Toff Time, the relay changes its position and the relay LED lights up. The relay remains open until the supply voltage is removed. The time is reset and counted again when the supply voltage is restored. If the set mode is delayed release, when 'U' voltage is applied to the supply input, the relay LED lights up, the relay pulls out immediately and starts counting the 'Ton' time. At the end of the Ton time, the relay releases and the relay remains closed until the supply voltage is removed. The counted time is reset to zero when the power is removed.

ZMN03 and ZMN04 models have info LED feature. The info LED helps to set the time. If any of the potentiometers is in the critical zone when first energized, the info LED will flash until any potentiometer changes. When there is a change in any of the potentiometers, the info LED starts to work for the potentiometer with the change. If the set potentiometer value is not in the critical zone, the LED lights up, if it is in the critical zone, the LED turns off.

1.6. Selection Table

Product Model	ZMN03	ZMN04
Time Range	0.1sec-100h	0.1sec-999min
Pull Delayed	√	√
Release Delayed	√	√
Contact Output	1 x C/O, 5 A @ 250 VAC	1 x C/O, 5 A @ 250 VAC
24 V AC/DC	√	√
220 V AC	√	√
DIN I Box	√	√

Table:2

1.7. Time Setting

ZMN03 :

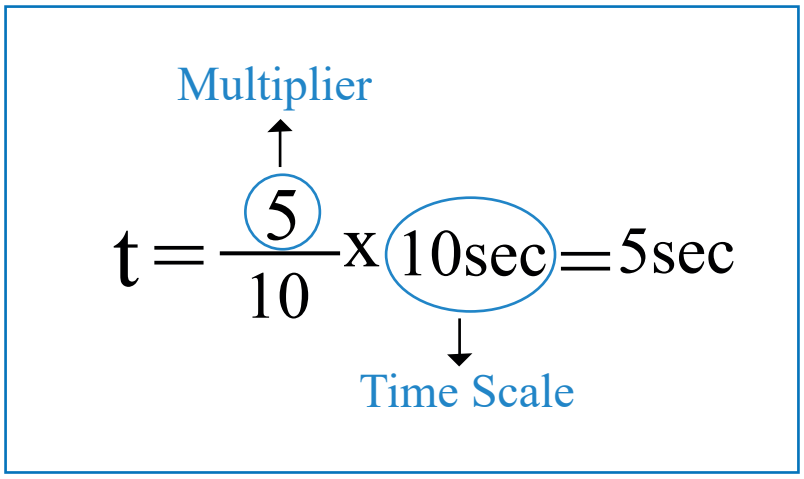

ZMN04 :

x10	x1	x0.1	Mode	Set Time
5	3	9	1s	53.9 Sec.
5	3	9	10s	539 Sec.
5	3	9	1m	53.9 Min.
5	3	9	10m	539 Min.

1.8. Function Diagram:

	Relay Voltage
U	Source Voltage

Table:3

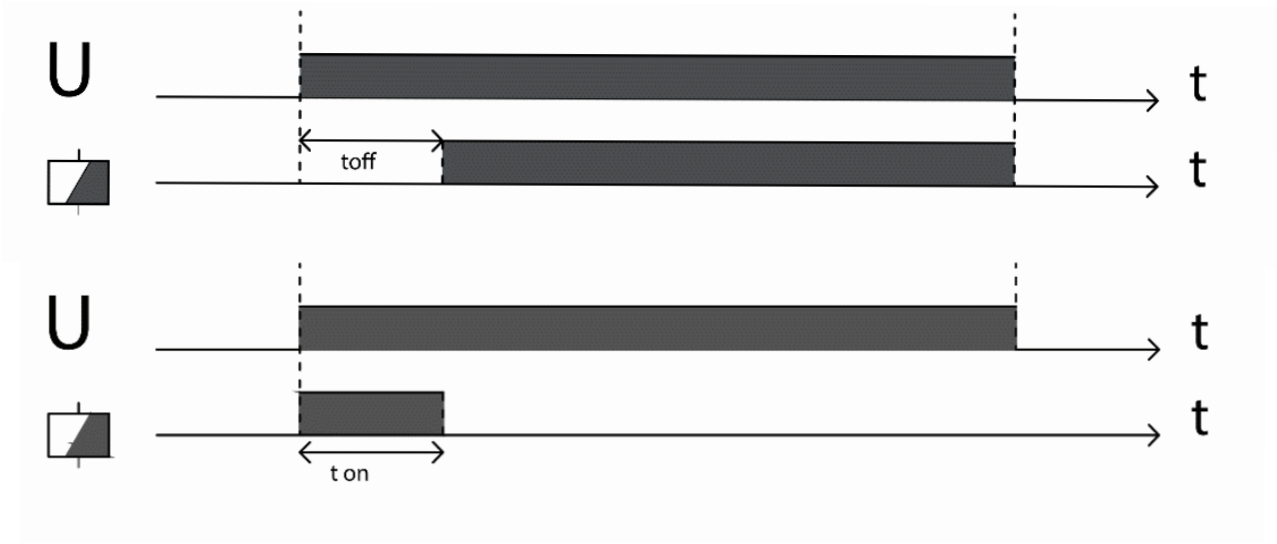

1.9. Technical Drawing

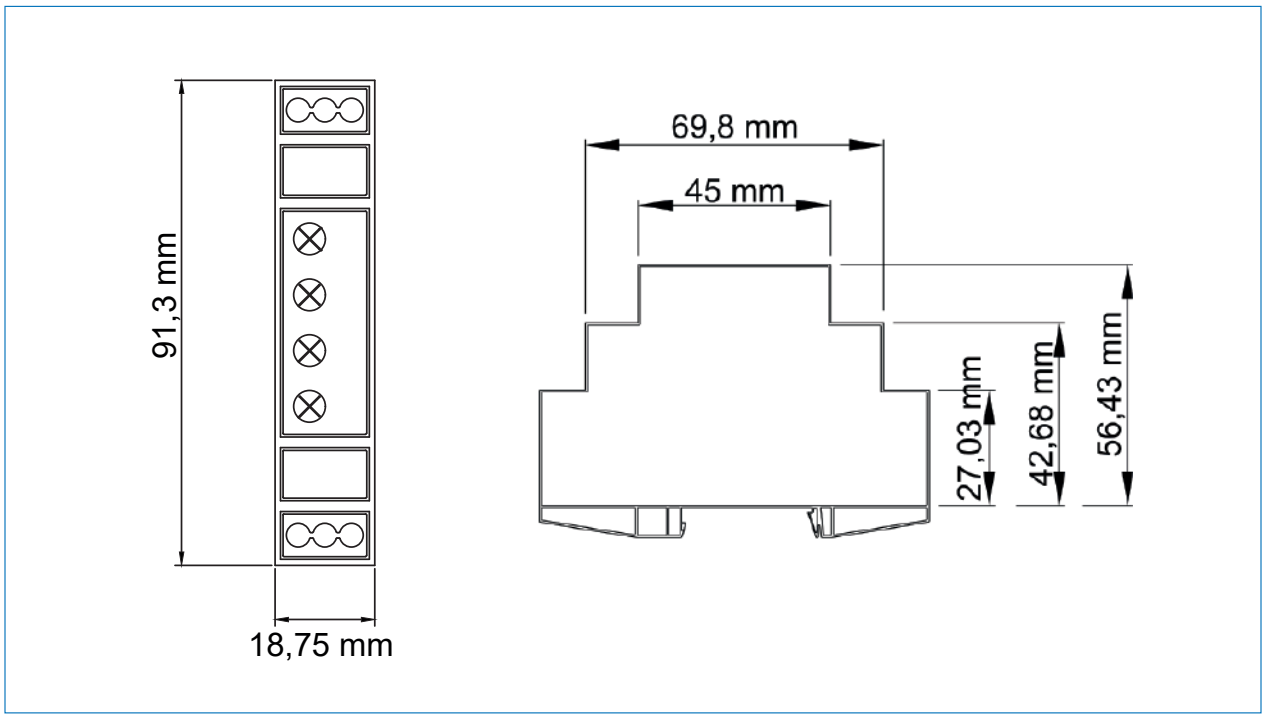

1.10. Product Assembly and Disassembly

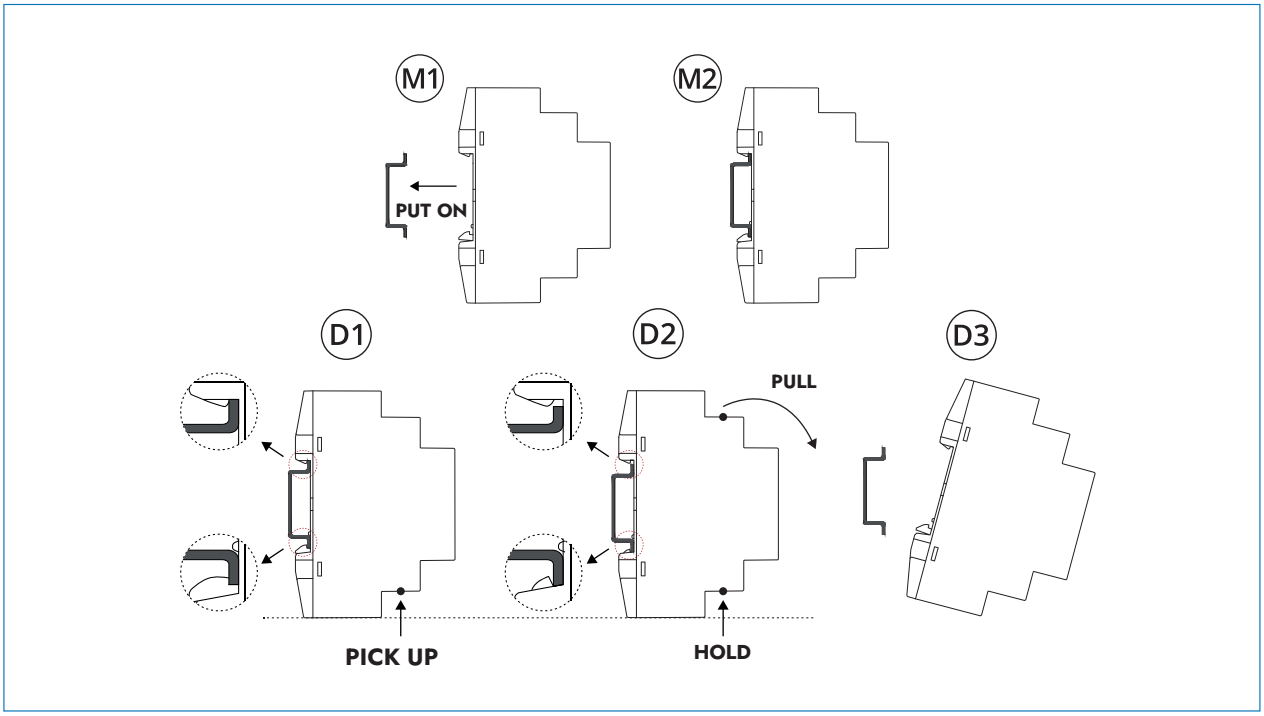

1.11. Connection Diagram

