8 Output Module User Manual

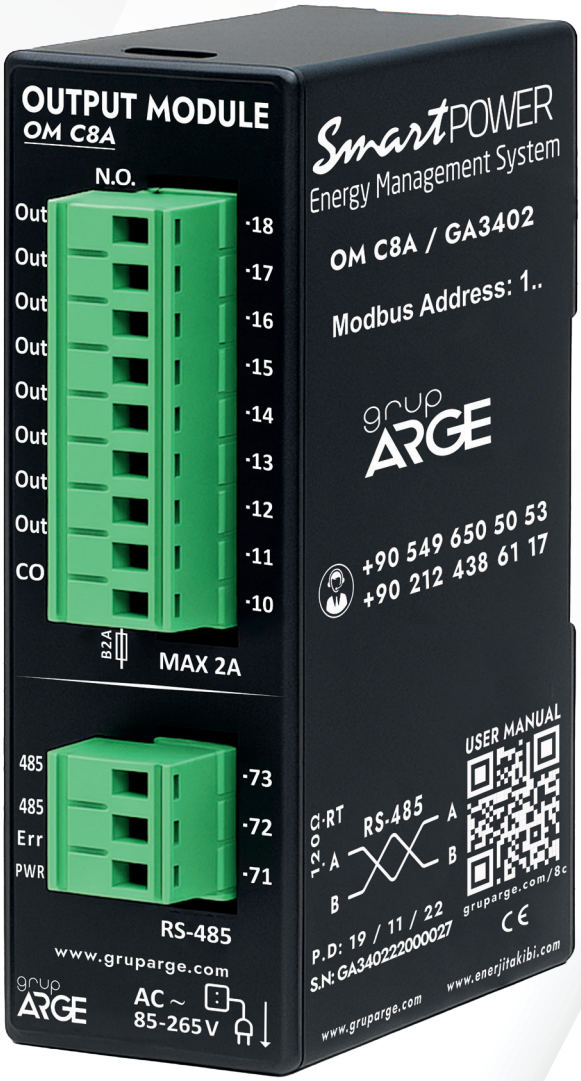

ADDRESS: Ikitelli OSB Mah. Cevre 14. Blok Sok. Telas Blok Dis Kapi No: 1 Kat: 1-2 Basaksehir/Istanbul

Phone: +90 212 438 80 24
Fax: +90 212 438 80 25

info@gruparge.com

V.25.1

CONTENTS

PROPER USE AND SAFETY REQUIREMENTS 3
1. INTRODUCTION 4
1.1.General Features 4
1.2. Technical Features 4
1.3. Technical Drawing 4
1.4. Connection Diagram 5
2. MODBUS MAP 6
2.1. Communication Parameters 6
2.2. Modbus Speed 6
2.3. Modbus Map 7
2.4. Reading Output States 7
2.5. Reading Outputs One by One 8
2.6. Multiple Control of Outputs 9

PROPER USE AND SAFETY REQUIREMENTS

Cut all the power when connecting and disconnecting the device to a panel.

Do not clean the device with a solvent or similar material. Only use a dry cloth.

Please do not intervene to the device when a technical problem is encountered and get in contact with a technical service within the shortest time.

If the warnings are not taken into account, our company or the authorized dealer shall not be held responsible for the negative consequences.

Do not dispose in the trash, the device must be delivered to the collection centers (electronic device recycling centers). It should be recycled or disposed of without harming human health and environment.

The installation, assembly, activation and operation of the device should be done and used by only expert professionals and in accordance with safety regulations and instructions.

1. INTRODUCTION

1.1. General Features

8 relay outputs on the device can be remotely controlled with Standard Modbus RTU. It can be remotely monitored with SmartPower terminals or integrated into other systems. The COM terminal is the common tip of the relays. When a relay is activated, it outputs the voltage connected to the COM terminal and the voltage output LED lights up. The device can be mounted on the in-panel rail.

Loads up to 5 Amps can be driven directly from the relay output. If a current of more than 5 Amps is to be drawn, it is necessary to control the load via a contactor. In this case, the relay output is used as the trigger signal of the contactor.

1.2. Technical Features

- Microprocessor based.
- OM C8D operates with 10-30 V DC supply.
- OM C8A operates with 85-265 V AC supply.
- Supports RS-485 Standard Modbus RTU protocol.
- There are 8 relays with a contact output current of 3 A (230 V).
- It has POWER, ERROR, RS-485 (Communication) LEDs...
- Operating ambient temperature of the device is between -10 °C and +55 °C
- Supply consumption power is less than 1 VA.
- It has IP40 protection class.

1.3. Technical Drawing

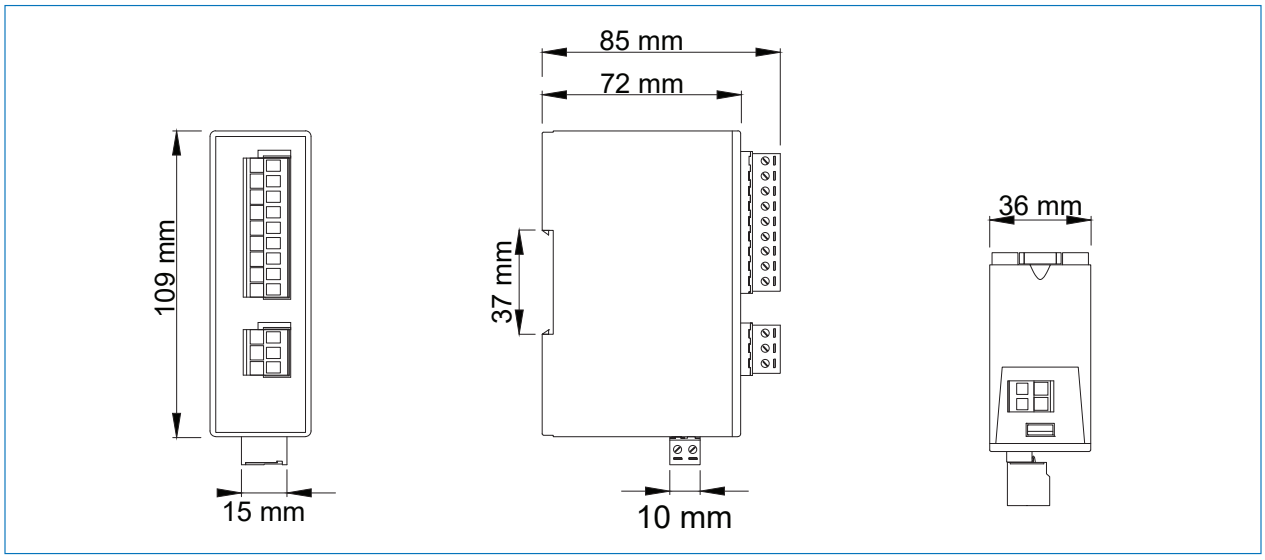

1.4. Connection Diagram

Output Module AC

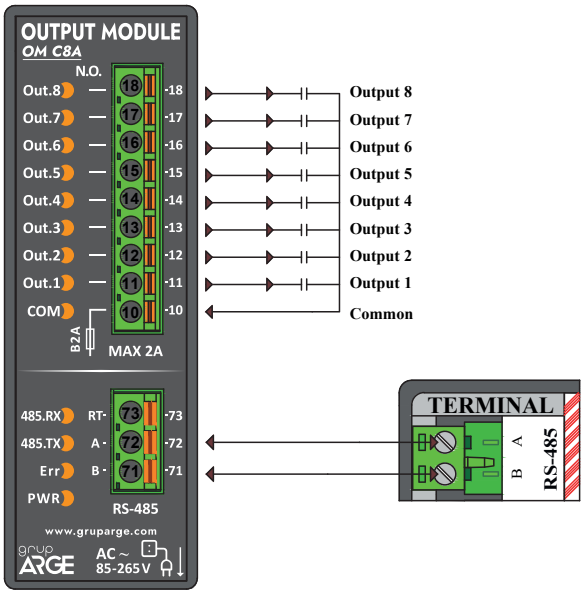

RT Terminal Block: It is used for optional activation of 120 a terminating resistor.

The terminating resistor is connected between RT and A terminals.

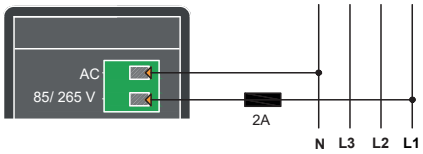

Output Module DC

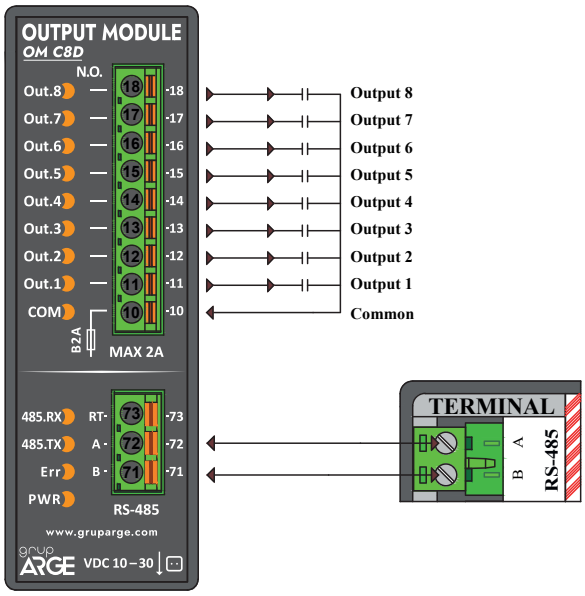

RT Terminal Block: It is used for optional activation of 120 a terminating resistor.

The terminating resistor is connected between RT and A terminals.

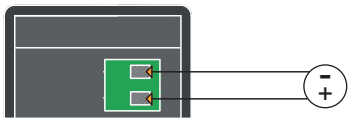

It is recommended to select the cable for RS-485 communications according to the table below.

Cable Distance	Recommended Cable	Alternative Recommendation
Up to 30 m	3*0,22 Shielded and Twisted Signal Cable	CAT-5 Ethernet Cable
Over 30 m	3*0,50 Shielded and Twisted Signal Cable	CAT-6 Ethernet Cable

2. MODBUS MAP

2.1. Communication Parameters

Baudrate	9600 bps
Data Bits	8
Parity	None
Stop Bits	1

NOTE: The default Modbus address is the number obtained by adding 100 to the last two digits of the serial number of the device. For example, suppose the serial number is 185247. Since it ends with 47, Modbus address becomes 147.

2.2. Modbus Speed

Modbus speed is determined by indexes between 0-4.The table below contains Modbus speeds according to the indexes. By adjusting the Bus Speed part of the Modbus map, the desired speed can be obtained from the table below.

Index	0	1	2	3	4
Modbus Speed (Bps)	1200	2400	4800	9600	19200

2.3. Modbus Map

GRUP ARGE	Version 02.00	
Input / Output Module	Multiplier	Address
Serial Number		100
Product (Type, Sub-Type) + Application Vers. (Main, Sub)		102
Hardware (0, Type) + Hardware Vers. (Main, Sub)		104
Parameter Vers. + System Vers. (Main, Sub)		106
Parameters		
Parameter Version		200
Working Hours		201
Modbus Address		206
Bus Speed		207
Read Protection Bit		208
Write Protection Bit		209
Read Password Confirm		210
Write Password Confirm		211
Device Specific Commands		
Device Restart		1900
Factory Reset		1901

2.4. Reading Output States

Query (Read Coil 01)				
Device Modbus Address	Function Code	Initial Input Address	Output Quantity	CRC
1 Byte	1 Byte (01)	2 Byte Hi-Low	2 Byte Hi-Low	2 Byte

Answer				
Device Modbus Address	Function Code	Byte Count	Input Status	CRC
1 Byte	1 Byte (01)	1 Byte (01)	1 Byte	2 Byte

Informations
There are 8 outputs in the module. The addresses of these outputs are: 1.Output → 00 2.Output → 01 3.Output → 02 4.Output → 03 5.Output → 04 6.Output → 05 7.Output → 06 8.Output → 07 *0 is read when a sign is applied to an output and read 1 at idle.*
Answer interpretation
When the 1-byte data (4th byte) giving the output status is analyzed as binary The highest-order bit (MSB) shows the 8th output, and the lowest-order bit (LSB) shows the 1st entry.
Example Reading the 4th Output of the Device with Address 01 (4th output LED is on)
Query: 01 02 00 03 00 01 xx xx Answer: 01 01 01 08 xx xx
Example Reading All Outputs of Device with Address 01 (1,2,5,8 LEDs are on)
Query: 01 01 00 00 00 08 xx xx Answer: 01 01 01 93 xx xx
Note: "xx xx" in the examples is a 2 byte CRC

2.5. Reading Outputs One by One

Query (Write Single Coil 05)				
Device Modbus Address	Function Code	Outout Address	Value to Write	CRC
1 Byte	1 Byte (05)	2 Byte Hi-Low	2 Byte Hi-Low	2 Byte

Answer				
Device Modbus Address	Function Code	Outout Address	Value to Write	CRC
1 Byte	1 Byte (05)	2 Byte Hi-Low	2 Byte Hi-Low	2 Byte

Informations
There are 8 outputs in the module. The addresses of these outputs are: 1.Output → 00 2.Output → 01 3.Output → 02 4.Output → 03 5.Output → 04 6.Output → 05 7.Output → 06 8.Output → 07 *When a relay is to be pulled, FF 00 is written to the "Value to be Written" (5th and 6th bytes).* *When a relay is to be released, 00 00 is written to the "Value to be Written" (5th and 6th bytes).*
Example Pulling the 4th Output of a Device with Address 01
Query: 01 05 00 03 FF 00 xx xx Anwer: 01 05 00 03 FF 00 xx xx
Example Releasing Output 4 of a Device with Address 01
Query: 01 05 00 03 00 00 xx xx Answer: 01 05 00 03 00 00 xx xx
NOTE: In the examples “xx xx xx” is the 2 byte CRC.

2.6. Multiple Control of Outputs

Query (Write Single Coils 0x0F)						
Device Modbus Address	Function Code	Initial Output Address	Output Quantity	Byte Count	Value to Write	CRC
1 Byte	1 Byte (0F)	2 Byte Hi-Low	2 Byte Hi-Low	1 Byte (01)	1 Byte	2 Byte

Answer				
Device Modbus Address	Function Code	Output Quantity	Value to write	CRC
1 Byte	1 Byte (0F)	2 Byte Hi-Low	2 Byte Hi-Low	2 Byte

Informations
There are 8 outputs in the module. The addresses of these outputs are: 1.Output —› 00 2.Output —› 01 3.Output —› 02 4.Output —› 03 5.Output —› 04 6.Output —› 05 7.Output —› 06 8.Output —› 07 *"Output Start Address" indicates which output we will control (00-07).* *"Output Quantity" determines how many outputs we will control (01-08).* *"Value to Write" Each bit of 1 byte of data represents an output. MSB is the 8th output and LSB is the 1st output.You can set the bit of the output you want to pull to 1 and the bit you want to release to 0..*
Example Pulling All Outputs of a Device with Address 01
Query: 01 0F 00 00 00 08 01 FF xx xx Answer: 01 0F 00 00 00 08 xx xx
Example Releasing All Outputs of a Device with Address 01
Query: 01 0F 00 00 00 08 01 00 xx xx Answer: 01 0F 00 00 00 08 xx xx
NOTE: In the examples "xx xx xx" is the 2-byte CRC.